SELECTIVE DISTANCE DETECTING AND LOCATING SYSTEM

Gheorghe MORARIU Marian ALEXANDRU Adrian MAILAT
Transilvania University, Brasov, Romania
1 – 3 Politehnicii str., Phone/Fax +40268478705, gmorariu@vega.unitbv.ro, alexandrum@vega.unitbv.ro

Abstract: The goal of this paper is to present a selective distance detecting and locating device capable of determining the position of a fixed or moving target situated inside of a monitored area of given width placed at a certain distance from the transmitter/receiver antenna. The locator unit performs both the location and ranging function and simultaneously identifies the target status (mobile/immobile) and nature (biological/non-biological).

Key words: *locating system, ultrasound, remote control*

I. INTRODUCTION

This paper presents a selective distance detecting and locating device capable of determining the position of a fixed or moving target situated inside a monitored area of given width placed at a certain distance from the transmitter/receiver antenna.

The system's functions are locally defined and executed by a microcontroller, but can also be remotely controlled using a PC.

Remote control of the system's functions is achieved via infrared transmission channels, whereas target detection and locating is provided by means of ultrasonic waves.

The distance to the monitored area as well as its width of coverage are defined and selected from the control unit and can be changed depending on the conditions required by the specific application.

With the target in fixed position, the system is able to establish whether the target is an object or a living creature.

The operation of the selective distance-detecting device is briefly illustrated in the functional block diagram of Figure 1.

II. THEORY CONSIDERATIONS

Defining and setting of the required commands and functions in order to ensure the appropriate operation of the selective distance detecting and locating system are based on the following expressions for the acoustic wave propagation velocity:

$$\lambda = \frac{c_p}{c_v}, \qquad (1)$$

where c_p is the specific heat at constant pressure and c_v

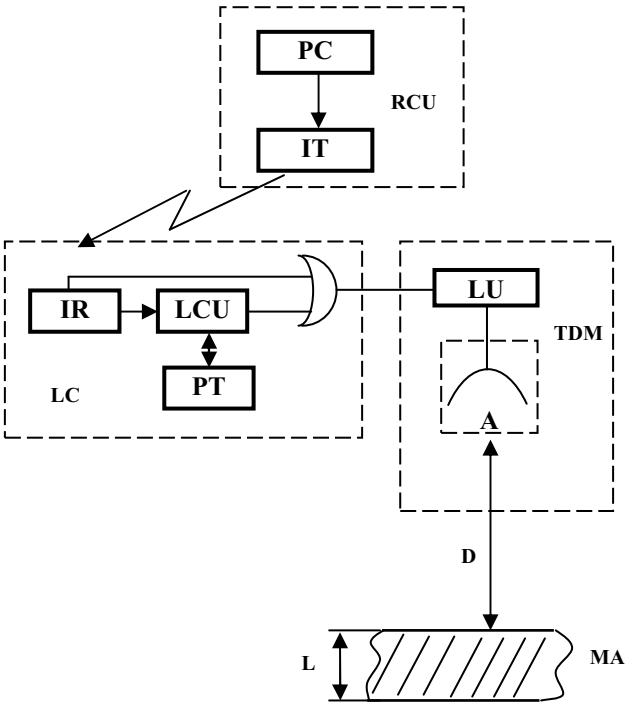

Figure 1. Selective locator functional block diagram

PC – personal computer, IT – infrared transmitter, RCU – remote control unit, IR – infrared receiver, LCU – local control unit, PT – programming terminal, LC – local control module, LU – locator unit, A – antenna, TDM – teledetection and telemeasuring module, D – distance to monitored area, L – width of the monitored area, MA – monitored area

represents the specific heat at constant volume.

$$v^2 = \lambda \frac{p}{\rho}, \qquad (2)$$

where v is the propagation velocity at constant pressure p and gas density ρ.

$$pV = RT, \qquad (3)$$

where V, T and R represent the gas volume, the absolute temperature and the perfect gas constant, respectively.

$$\frac{p}{\rho} = \frac{p_0}{\rho_0}(1 + \alpha \cdot t), \qquad (4)$$

where p_0 represents the normal gas pressure and ρ_0 represents the normal gas density.

Hence, it results:

$$v = \sqrt{\lambda \frac{p_0}{\rho_0}(1 + \alpha \cdot t)}; \quad \sqrt{\lambda \frac{p_0}{\rho_0}} = 331.3 \qquad (5)$$

and

$$v = 331.3\sqrt{(1 + \alpha \cdot t)}, \qquad (6)$$

where $\alpha = 0.0362$ for atmospheric air.

Expanding (6) in the point $t = 0$, will yield, to a first approximation:

$$v = 331.3 + 0.6t \qquad (7)$$

where t is the temperature in (^{o}C).

III. THE SYSTEM OPERATION

As results from the relation (7) given the temperature of the operating medium, the distance to the monitored area D and its width L, the remote control unit (RCU) or the local control unit (LCU) will output a square voltage signal, as shown in the *Figure 2*, called the control signal (CS).

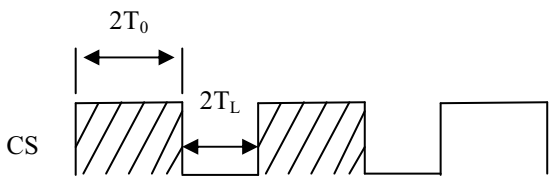

Figure 2.The control signal CS

While over the $2T_D$ interval the system's receiving mode is blocked, during the $2T_L$ interval the system is activated, the ultrasonic signal being generated it explores the monitored area and is reflected back to the system's transmitting antenna.

Within the limits of the monitored area the system is able to determine the precise distance to the target, its direction of movement and, if the target is motionless within the monitored area, its nature (object or creature) is identified.

The signal flowchart and the signal sequence diagram as presented in the *Figures 3* and *4*, respectively, illustrate the main operation sequences of the system's locator unit (LU).

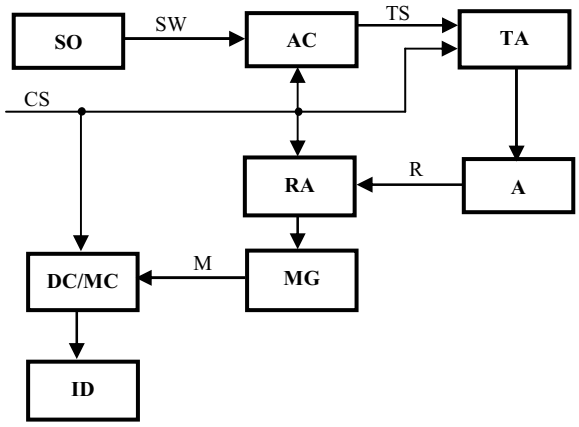

Figure 3. Locator unit signal flowchart

SO – sinewave oscillator, AC – access circuit, TA – transmitter amplifier, ID – target identifier, A – transmitter/receiver antenna, MG – marker generator, DC – digital comparator, MC – microcontroller

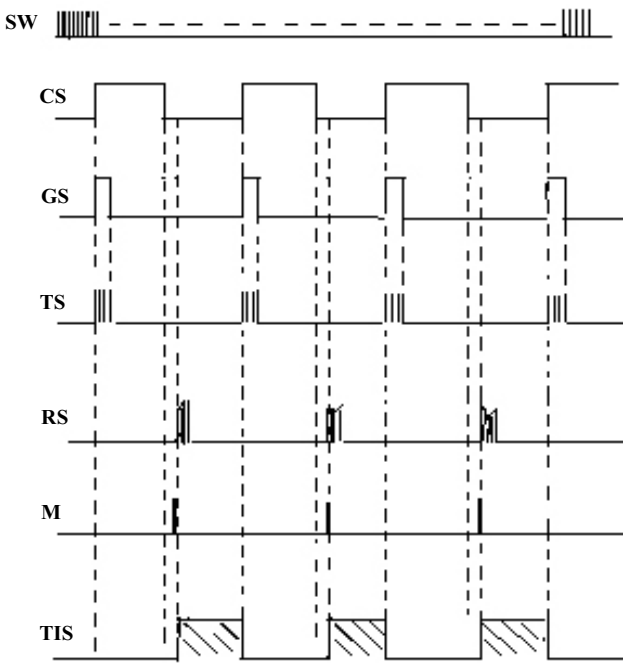

Figure 4. Locator unit signal sequence diagram

SW – sinewave signal, CS – command signal, GS – gating signal, TS – transmitted signal, RS – received signal (echo-location signal), M – marker, TIS – target (status/nature) identifier signal

IV. TARGET LOCATING AND IDENTIFYING PROCEDURES

The control signal CS as shown in the sequence diagram of Figure 4, generated by the local control unit LC, can be triggered from the remote control unit RCU via an amplitude modulated high-frequency infrared transmission.

By applying the remote control mode, the control signal CS will represent the envelope of the amplitude-modulated signal.

This AM signal is subsequently demodulated and amplified by the infrared receiving unit IR that simultaneously provides signal waveform correction. After being processed as presented above, the signal is applied both to the programming terminal PT as well as the local control unit LCU, thus providing the inhibition of the local generation sequence and finally transferred via the OR logic gate to the teledetection and telemeasuring module TDM.

The control signal CS along with the sinewave signal SW, which after its conversion into ultrasonic signal represents the ultrasonic carrier frequency, combines in the next sequence with the gating signal GS generating ultrasonic transmission repetitive signal bursts TS that are used for scanning the monitored area MA.

The gating signal GS enables the transfer of a constant number of the sinewave carrier signal periods for both ultrasonic conversion and transmission (during experimental investigations, between 2 and 4 GS periods were necessary depending on both the distance to and the width of the monitored area).

Remark: it should be mentioned here that the gating signal GS must continuously enable the transfer of the same number of sinewave ultrasound carrier signal periods during an operating program.

The ultrasound transmission signal TS explores the pre-established monitored area MA and if an inside target is detected, the reflected signal returns as an echo signal to the antenna.

By comparing the pre-established depth of the monitored area with the depth to which the transmission signal TS has actually penetrated the area and given the overall time required

$$2(T_D + T_L) = T_C, \tag{8}$$

the time required by the exploring wave to reach the target

$$2(T_D + T_X) = T_0 \tag{9}$$

and the time required to pass through the monitored area $2T_L$ we can calculate the depth of the monitored area as:

$$H_L = (T_0 - T_C - 2T_L)\frac{v}{2}. \tag{10}$$

With moving objects it appears evident that H_L will vary with time over several measuring sequences.

For static objects such as living creatures, breathing within the limits of the monitored area, the breathing identification procedure will be initiated based on the following considerations: the wavelength of the ultrasonic carrier frequency is $\lambda = 2 \div 4$ mm varying due to the changing body volume of a breathing creature; the bursts in the transmission signal will be reduced to two active pulses in order to detect fine phase shifts; the distance reference operation $DH = (T_D + T_L)v - H_L$ is initiated (assuming a highly stable control signal CS); by repetitive measurements, the instantaneous *DH* value is compared with a previous measurement value. If after a measurement sequence a variation of the *DH* value occurs, the target – object is identified as a static creature.

The output stage of the system with its transmitter/receiver antenna has an essential contribution to its overall measurement performances.

The output stage consists of the following functional blocks:

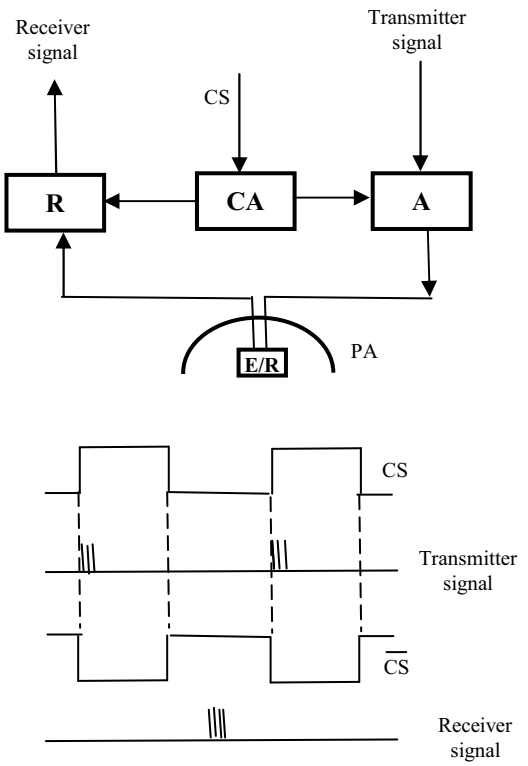

Figure 5. The output stage of the system and the main electric signals

A. The power transmitter stage denoted "A" in the diagram of Figure 5, which provides a voltage amplification of the transmitted signal from a 0.14 V input level up to around 1 kV output voltage ensuring a useful range or detection distance of 40 m.

The transmitter's output is connected to the electro-sonic transducer E/R.

The amplifier signal level can be adjusted depending on the distance to the target object.

B. The receiver amplifier "R" (as shown in the Figure 5) is a tuned amplifier operating in the 80 kHz band, its input signal being applied by the piezoelectric transducer of the E/R device in the reception chain.

The signal applied to the receiver amplifier is proportional with the ultrasonic echo reflected from the target in the monitored area.

C. The enabling circuit "CA", in the diagram of the Figure 5, is a command (control) unit which enables either

the transmitter amplifier operation only or the receiver amplifier operation, thus eliminating the possibility of echo noise occurrence when a signal is radiated into the monitored area. This unit is controlled by the control signal CS.

D. The complete unit includes the E/R transducer module along with the parabolic antenna PA, the former being mounted in the focal point of the antenna dish.

This allows for accurate detection of the echo signal and also for increased directivity of the ultrasonic beam which explores the monitored area.

The diagram of Figure 5 presents the sequence of the main electric signals through the output E/R stage.

V. CONCLUSIONS

The presented system for locating and identifying target – objects inside a pre-established area of given width and depth is particularly suitable for specific application areas such as: distance monitoring and surveillance operations of protected areas; medical purposes for monitoring and measurement of human respiratory system; water (maritime) navigation and traffic monitoring systems; the underwater researches.

Experimental laboratory investigations demonstrated the accuracy of the described system over distances of up to 40 m. For distances up to 15 m, the minimum width of the monitored area was 1 cm, while increasing up to 7 ÷ 8 cm at a distance of 30 m from the signal source.

REFERENCES

[1] P. Sidhu, W. Chong, "Measurement in Ultrasounds: A Practical Handbook", *Amazon*, 2004.
[2] M. Hofer, "Ultrasound Teaching Manual: The Basics of Performing and Interpreting Ultrasound", *Amazon*, 2004.
[3] *** "Infrared Radiation", *Columbia Encyclopedia*, VI Edition, 2007.
[4] S. Kargov, A. Prosperetti, "Linear Thermoacoustic Mobility in the Time Domain", A.SA – V006, 1998.
[5] M. Croker, "Handbook of Acoustics", *Willey*, N.Y., 1998.
[6] C. Boyles, " Acoustic Waveguides", *Willey*, 1989.
[7] *** "Measurement and Automation Techniques", *Endres+Hauser*, SD/11/Ch/08.93