Course 13-14
The SDH multiplexing strategy. Mapping of PDH tributaries. The SDH reference model.

Zsolt Polgar

Communications Department
Faculty of Electronics and Telecommunications,
Technical University of Cluj-Napoca

Content of the course

- The SDH/SONET multiplexing strategy;
  - The elements of the SDH/SONET multiplex;
    - Block structures used by the SDH system;
    - Block structures used by the SONET system;
  - The SDH/SONET synchronous multiplexing scheme;
    - The multiplexing in the SDH system;
    - The multiplexing in the SONET system;
- The overhead information used for controlling the synchronous multiplexing;
  - The SDH/SONET sections;
  - Error monitoring;
  - The overhead information associated to SDH/SONET frames and containers;
- Pointers and pointer operations in the SDH/SONET systems;
  - The utility/role of pointers;
  - Pointer operations;
  - Structure of the SDH pointers;

Content of the course

- Mapping of PDH flows in SDH containers;
  - Synchronous and asynchronous mapping techniques;
  - Asynchronous mapping of the PDH flows in SDH containers;
    - Mapping of E4, E3, E1 and T1 PDH flows in the appropriate containers;
- The reference model associated to SDH equipments;
  - Characterization of the reference model's component blocks;
- Protection switching in SDH systems;
  - Basic definitions related to protection switching;
  - Protection switching procedures;
  - Path/sub-network protection switching.

The elements of the SDH/SONET multiplex

- Container C;
  - Represents a bloc structure with imposed dimensions;
  - Contains only data belonging to a tributary;
    - doesn't contain any control or management information;
  - There are containers with different dimensions adapted to the data rate of different PDH tributaries;
    - the container's transport capacity is chosen larger than the rate of the corresponding PDH tributaries;
      - the rate deviation of the PDH signals from the nominal value can be managed by an appropriate positive justification .
  - Containers characteristics to the SDH system:
    - C4 – 149,76Mbps bit rate;
    - C3 – 48,384Mbps bit rate;
    - C2 – 6,784Mbps bit rate;
    - C12 – 2,176Mbps bit rate;
    - C11 – 1,6Mbps bit rate.

The elements of the SDH/SONET multiplex

- Virtual container VC;
  - Represents the container extended with a „Path Overhead” (POH);
    - POH is used to control and monitor the transmission of information of the container on the entire path between the source and the destination;
    - it is used also to identify the content of the container;
    - POH is not modified during the transmission;
    - superior order containers (C3 and C4) have the POH composed of a column of 9 bytes.
- Inferior order containers (C11, C12 and C2);
  - POH is composed of 4 bytes distributed over 4 successive containers;
    - one container includes only a single POH byte.
- Administrative units AU;
  - These units are obtained from the VC-3 and VC-4 virtual containers by adding pointers to these structures;
    - the pointer establishes the relation between the STM-1 reference point and the beginning of the VC-3 and VC-4 virtual containers.

The elements of the SDH/SONET multiplex

- the AU3 pointer is composed of 3 bytes;
- the AU4 pointer is composed of 9 bytes;
  - out of from which only 5 bytes are used : 2 pointer bytes+ 3 negative justification bytes.

- The payload of the STM-1 frame consists of one AU4 unit or three AU3 units.

- Structure of the containers and virtual containers;

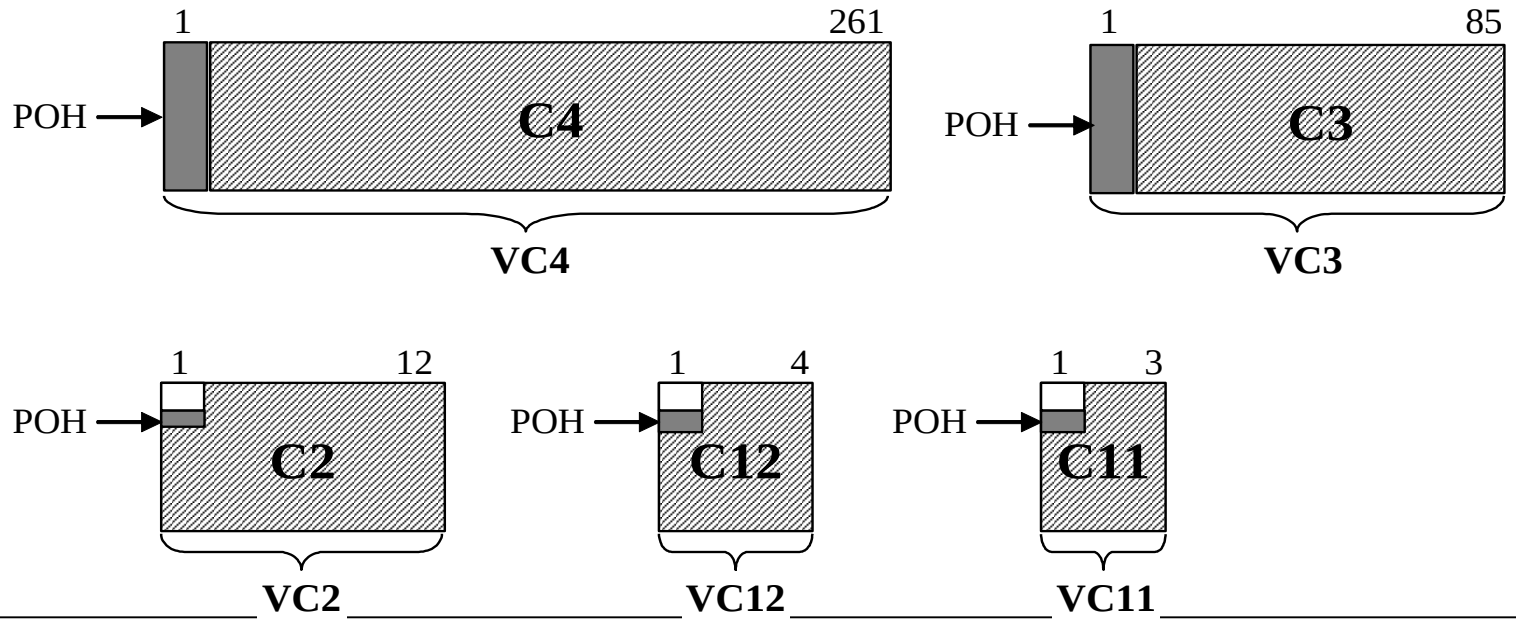

The elements of the SDH/SONET multiplex

- Tributary units TU;
  - These units are composed of VC11, VC12, VC2 and VC3 virtual containers plus a pointer;
  - In the TU11, TU12 and TU2 units is place only for one pointer byte, but there are necessary 4 bytes for pointer operations;
    - the solution is the distribution of the pointer bytes over 4 TU units.
  - In the TU3 unit obtained from a VC3 container is used a 3 bytes pointer;
  - Parameters of the tributary units of the SDH system;

TU type	Structure	Global rate
TU11	9 lines, 3 columns	1,728Mbps
TU12	9 lines, 4 columns	2,304Mbps
TU2	9 lines, 12 columns	6,912Mbps
TU3	9 lines, 86 columns	49,535Mbps

The elements of the SDH/SONET multiplex

- Structure of the administrative units and of the tributary units used in the SDH system;

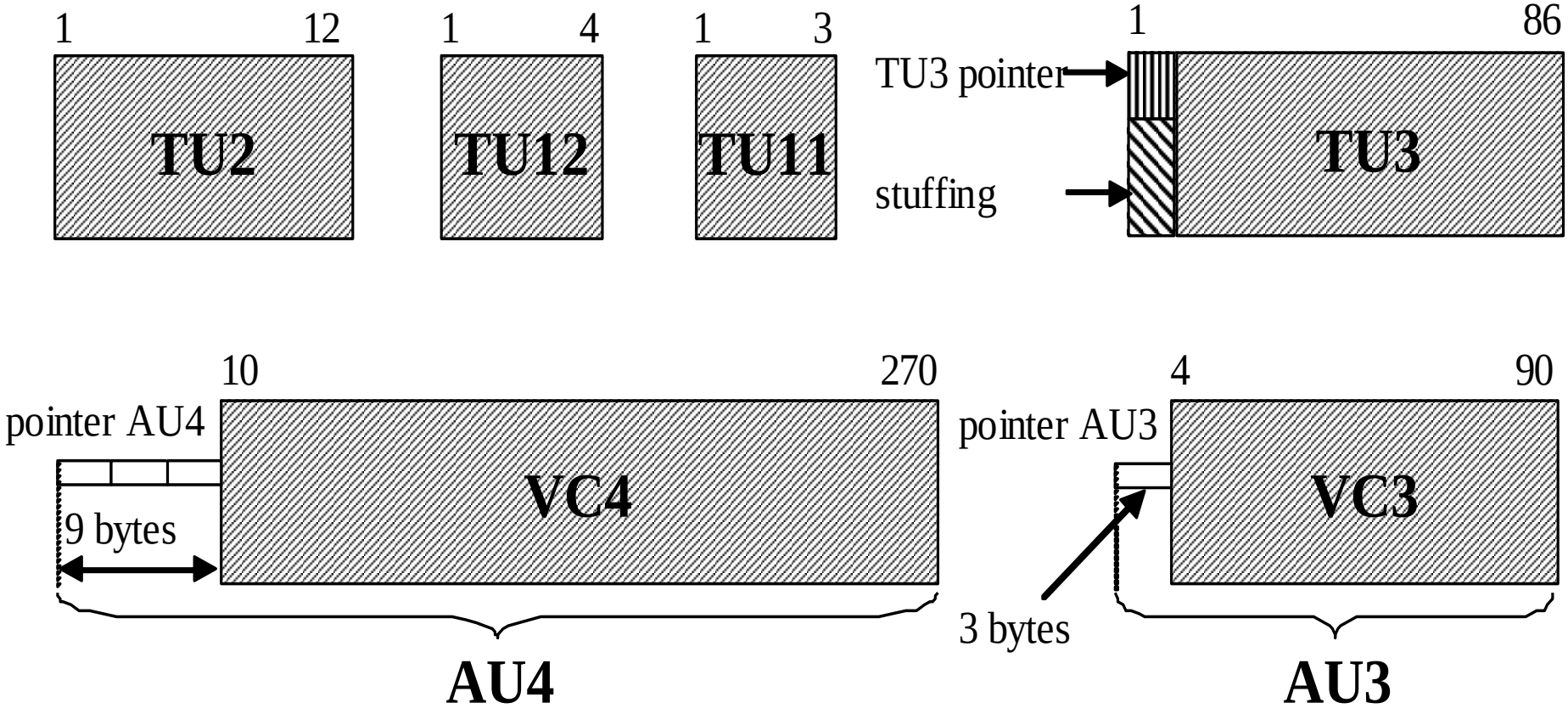

The elements of the SDH/SONET multiplex

- Tributary Unit Group TUG;
  - Tributary units are multiplexed in tributary unit groups;
    - these units represent a grouping of signals structured in frames with 125μs period and having identical phase (position).
  - The generation of the TUG units is achieved by a simple column by column multiplexing of the TU units;
    - no phase (position) adjustment is performed.
  - There are two types of TUG units:
    - TUG2 – includes a TU2 unit or 3 TU12 units or 4 TU11 units;
    - TUG3 – includes one TU3 units.
- Administrative Unit Group AUG;
  - Is composed of one AU4 unit or three multiplexed AU3 units;
    - it is a structure composed of 261 columns, 9 rows plus 9 pointer bytes in the fourth row.

The elements of the SDH/SONET multiplex

- Bloc structures used in the SONET system:
- SPE - SONET Payload Envelope;
  - It is a structure equivalent with the SDH VC3 virtual container;
  - Is composed of:
    - payload: a matrix structure with dimensions: 9 lines × 86 columns;
    - POH composed of one column with 9 lines.
  - The payload capacity is 49,536 Mbps, and the capacity of the entire SPE container is 50,112 Mbps;
- Virtual Tributary VT;
  - These units are similar with the TU units of the SDH system;
  - There are 4 such units:

VT type	Structure	Rate
VT1.5	9 lines, 3 columns	1,728Mbps
VT2	9 lines, 4 columns	2,304Mbps
VT3	9 lines, 6 columns	3,456Mbps
VT6	9 lines, 12 columns	6,912Mbps

The elements of the SDH/SONET multiplex

- VT units have (like the TU units of the SDH system) a POH on 4 bytes and a pointer also on 4 bytes;
  - POH and the pointer are distributed over 4 consecutive VT units;
- Virtual Tributary Group VTG;
  - Matrix structure composed of 9 lines and 12 columns;
    - it can include 4 VT1.5 units, 3 VT2 units, 2 VT3 units and 1 VT6 unit.

The SDH multiplexing scheme

- Synchronous multiplexing implies in general the following operations:
  - Assembling of the PDH data flows or flows generated by other sources in the appropriate containers;
  - Generation of the virtual containers by attaching the POH (Path Overhead);
  - Assembling of the tributary units by attaching the pointers and inserting the containers at the appropriate positions in these units;
  - Generation of the administrative units similarly to the tributary units;
  - Generation of the basic transport frames;
  - Multiplexing of several basic transport frames into a superior order transport frame.

The SDH multiplexing scheme

- The whole SDH multiplexing scheme;

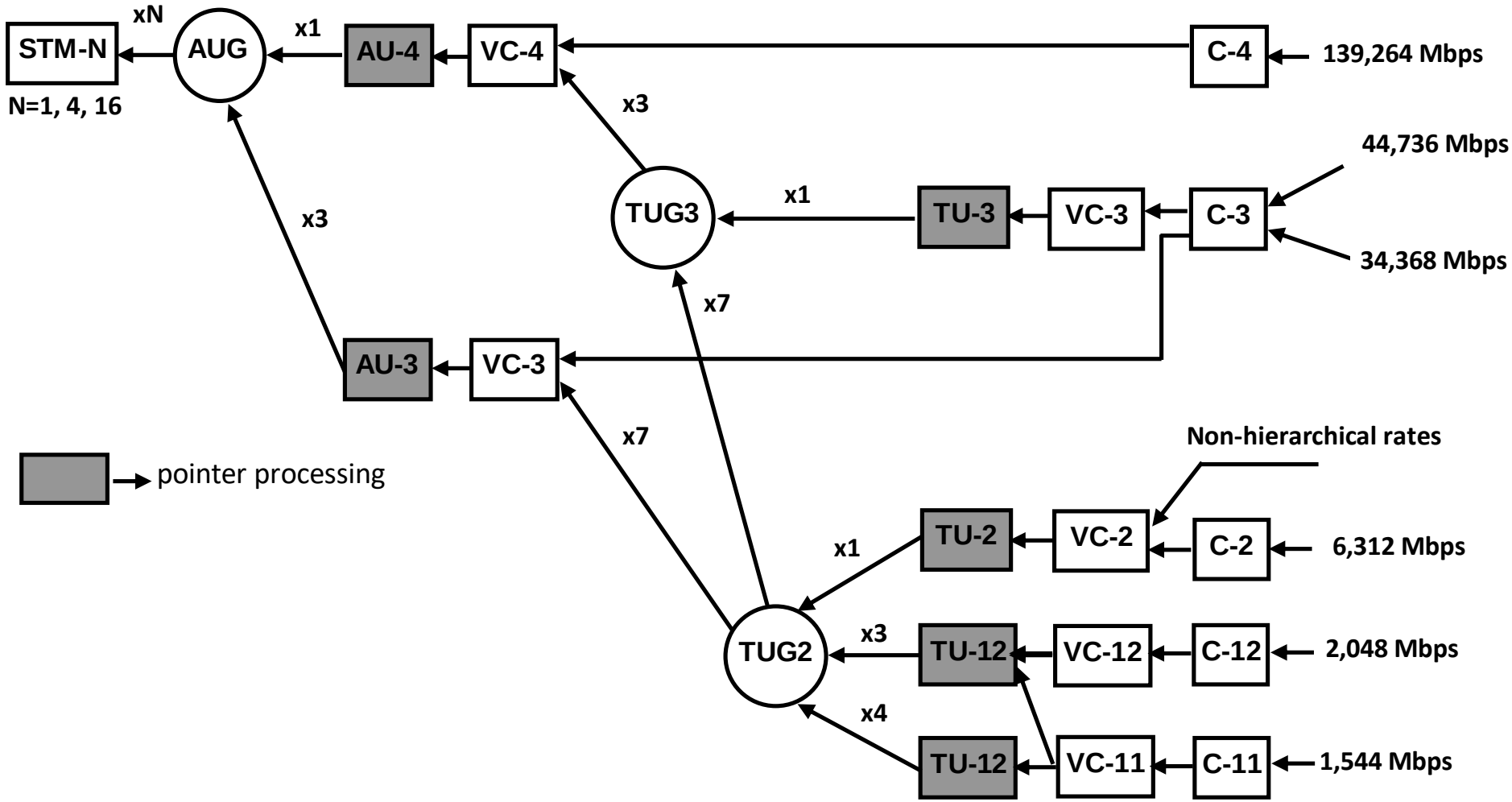

The SDH multiplexing scheme

- Multiplexing of the C4 container into the STM-N frame;

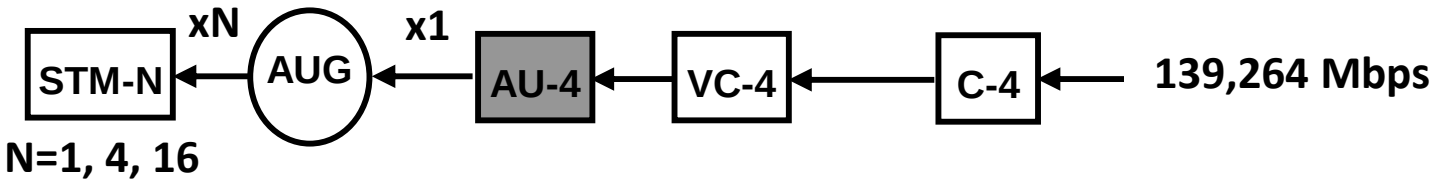

- The operations performed in this case are the following:
  - the plesiochronous tributary signal having a rate of 139.264Mbps is assembled into a C4 container;
  - VC4 is generated by adding the POH;
  - the AU pointer is added to the VC4 and it is obtained the AU4 unit;
  - the AU4 administrative unit is converted into an AUG structure;
    - this structure includes the block having 9 rows, 261 columns and in row 4 an additional number of 9 bytes are used for the AU pointer;
  - AUG is inserted into an STM-1 frame.

The SDH multiplexing scheme

- Multiplexing of a C4 container into an AUG unit;
  - The phase adjustment related to the use of the AUG pointer.

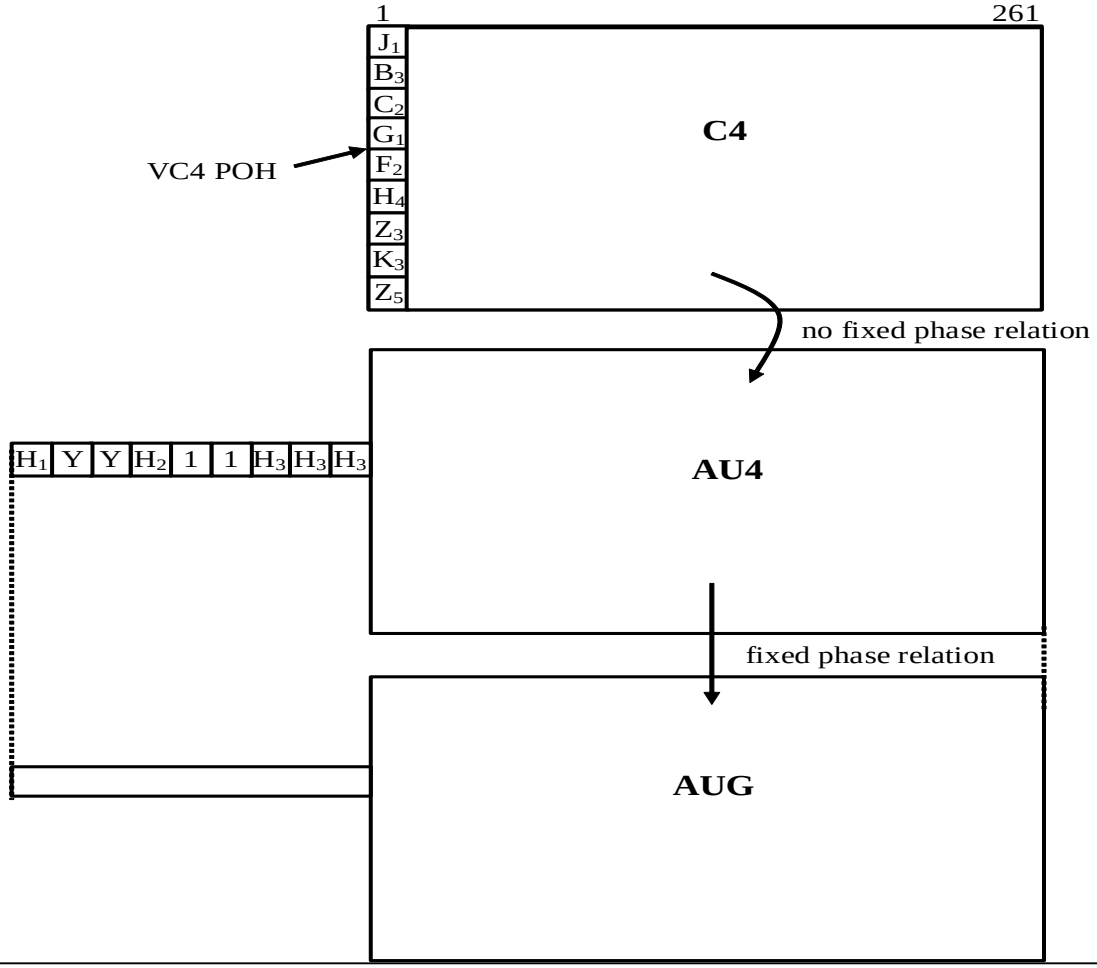

The SDH multiplexing scheme

- Multiplexing of AUG unit into an STM-N transport frame;

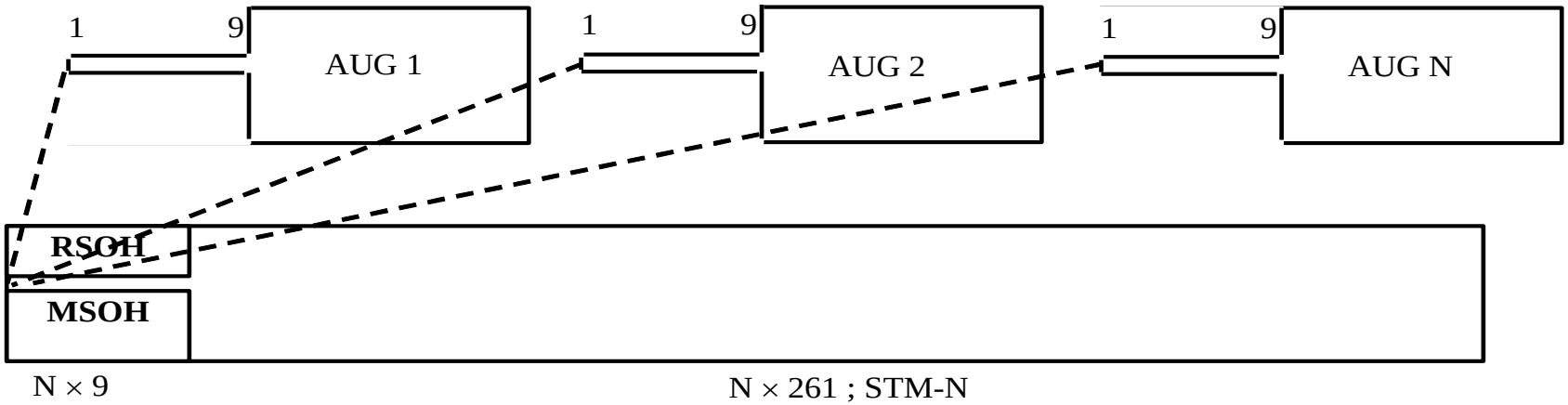

- Direct multiplexing of the C3 container into an STM-N frame;

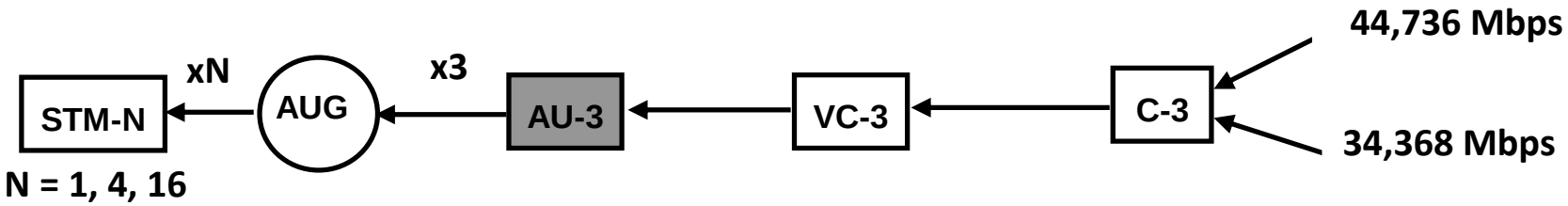

  - The VC3 container is transformed in the AU3 units by adding the AU3 pointer composed of 3 bytes;
    - the pointer establishes the position of each VC3 container in the STM-1 frame.
  - The AU3 units have the same fixed phase relatively to the STM-1 frame;

The SDH multiplexing scheme

- Details related to the multiplexing of the C3 containers into AUG;
  - The AUG structure is obtained by multiplexing three AU3 unit byte by byte.

- The generated AUG can be mapped directly into an STM-1 frame, or N AUG units can be multiplexed byte by byte into an STM-N frame;
- It has no importance if the AUG includes AU3 or AU4 units.

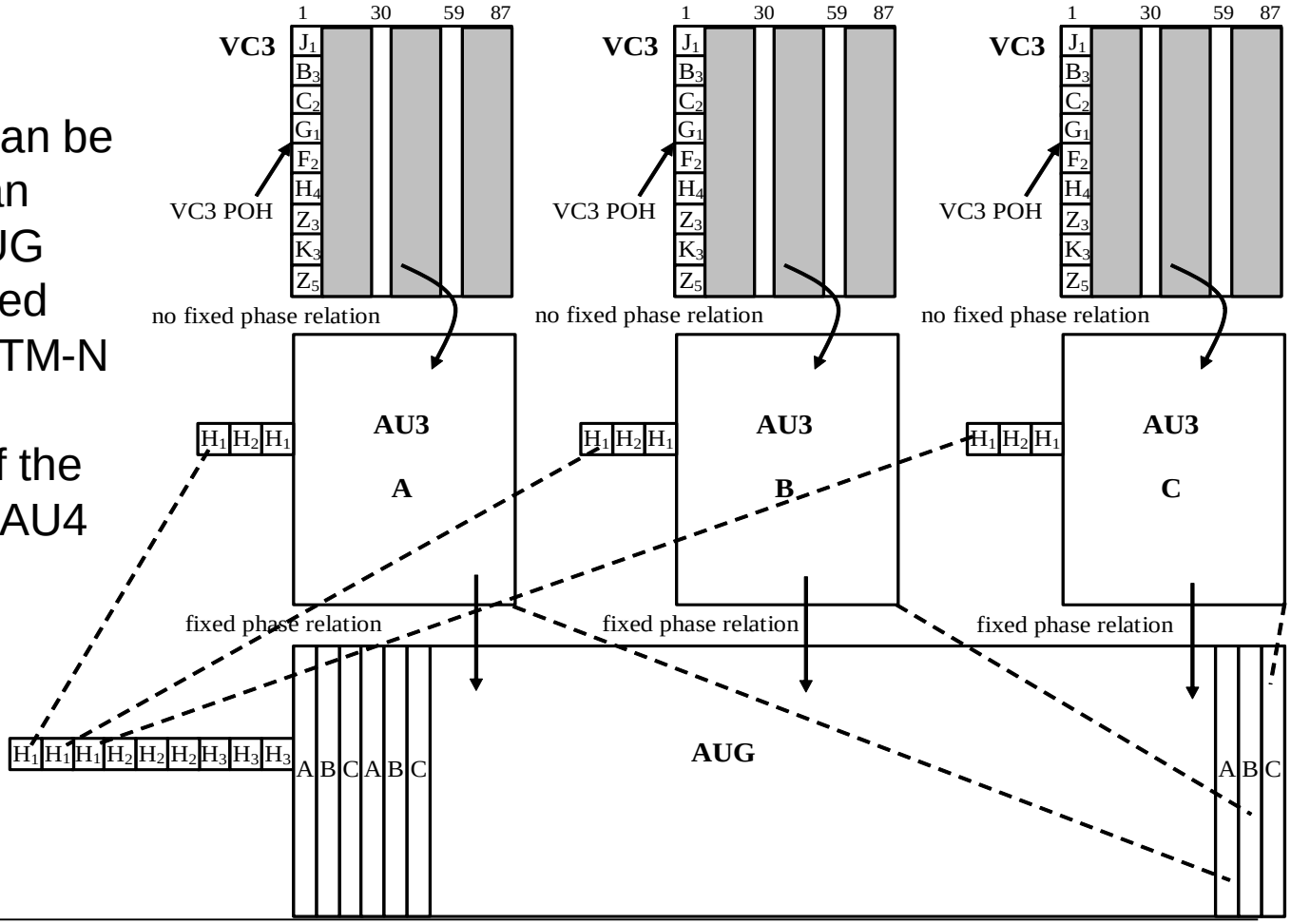

The SDH multiplexing scheme

- Indirect multiplexing of the C3 container into an STM-N frame;

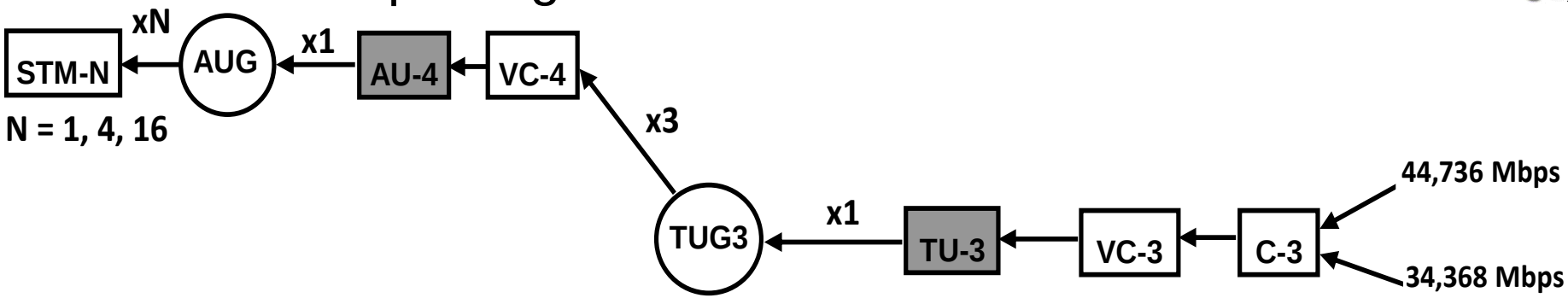

- the 34,368Mbps signal (or 44.736Mbps) is assembled in the C3 container;
- the VC3 virtual container (composed of 9 lines and 85 columns) is generated by adding the POH;
- the TU3 tributary unit is generated (86 de columns and 9 lines) by adding a pointer to the VC3;
- the TU3 tributary unit generates TUG3 units (TUG3 is practically identical with TU3) and 3 TUG3 units can be multiplexed into a C4 container;
- the VC4 virtual container is generated by adding the POH;
- VC-4 is inserted into an STM-1 frame or an STM-N frame.
- three TUG3 units are multiplexed into a C4 container byte by byte;
  - TUG3 has a fixed position relatively to the VC4 container.

The SDH multiplexing scheme

- Structure of the TUG3 unit and the insertion of the C3 container in this unit;
  - The position of the VC3 container in the TUG3 unit is established by the TU3 pointer composed of 3 bytes.

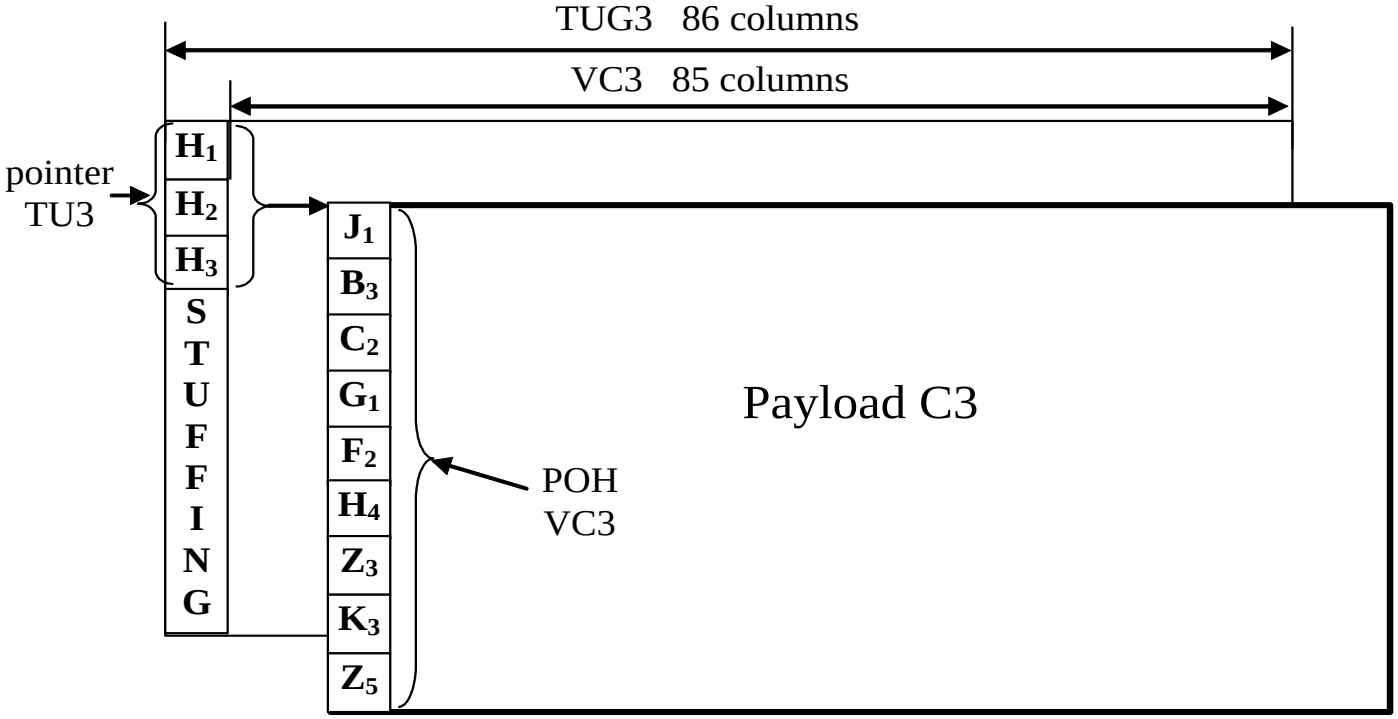

The SDH multiplexing scheme

- Multiplexing of the TUG3 units into a VC4 container;

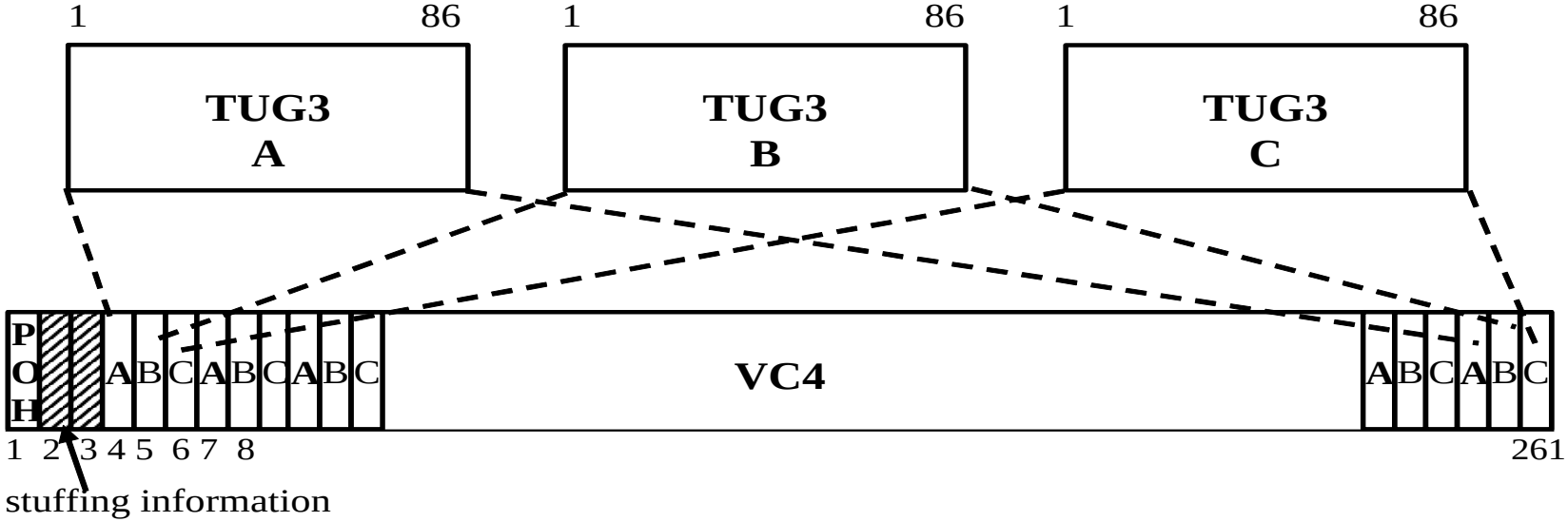

- Multiplexing of the C11, C12 and C2 containers into a TUG2 unit;
  - according to the bit rate, the signals are assembled in containers with different dimensions;
  - the virtual containers are generated by adding the POH;
  - the TU11, TU12 and TU2 units are generated by adding the pointer;
    - **POH and the pointer are distributed on 4 TU units, each having only one POH and pointer byte – it is generated a TU multiframe.**

The SDH multiplexing scheme

- TU11, TU12 and TU2 units are multiplexed into a TUG2 unit columns by columns;
  - there is a fixed relation between the TUG2 unit and the TU units multiplexed into the TUG2.

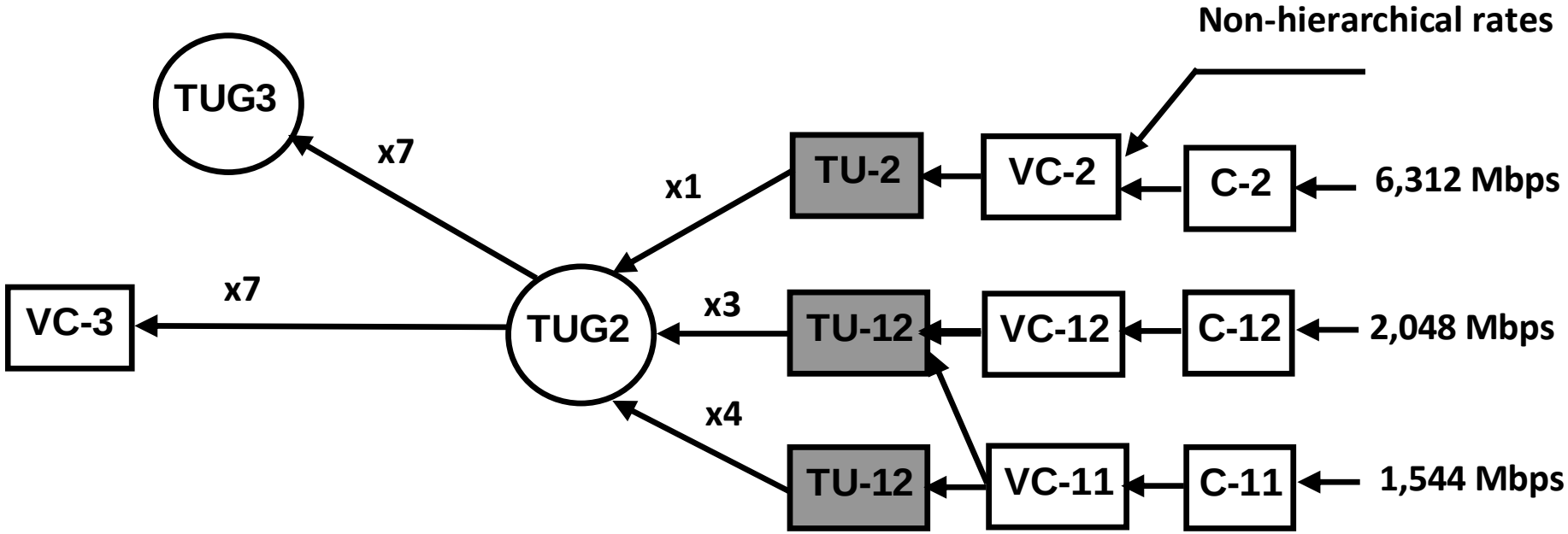

The SDH multiplexing scheme

- Multiplexing of the TU tributary units into the tributary group unit TUG2 and after that into the TUG3 unit;

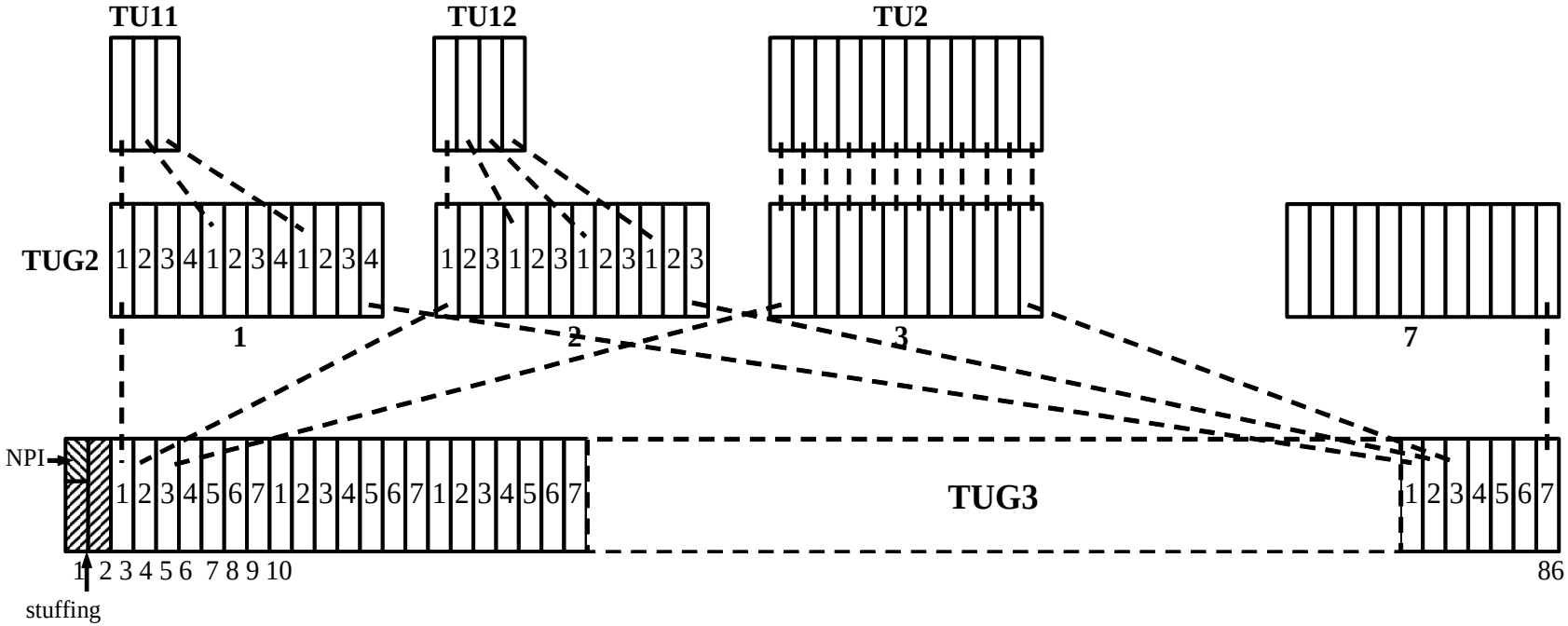

- It is a fixed phase relation between the TUG2 and the TUG3 units;
  - it is not necessary the use of a TU3 pointer in the first column of the unit;
  - the TU3 pointer is replaces with NPI (Null Pointer Indicator);
  - a TUG3 unit can be generated by multiplexing 7 TUG2 units byte by byte.

The SDH multiplexing scheme

- Multiplexing of the TUG2 tributary unit groups into VC3 containers;
  - Represents an alternative to the multiplexing of TUG2 into TUG3;
    - a VC3 virtual container is generated by multiplexing 7 TUG2 units byte by byte;
    - the multiplexing of the TUG2 units is made in the columns 2 – 85, column 1 being occupied by the VC3 POH.

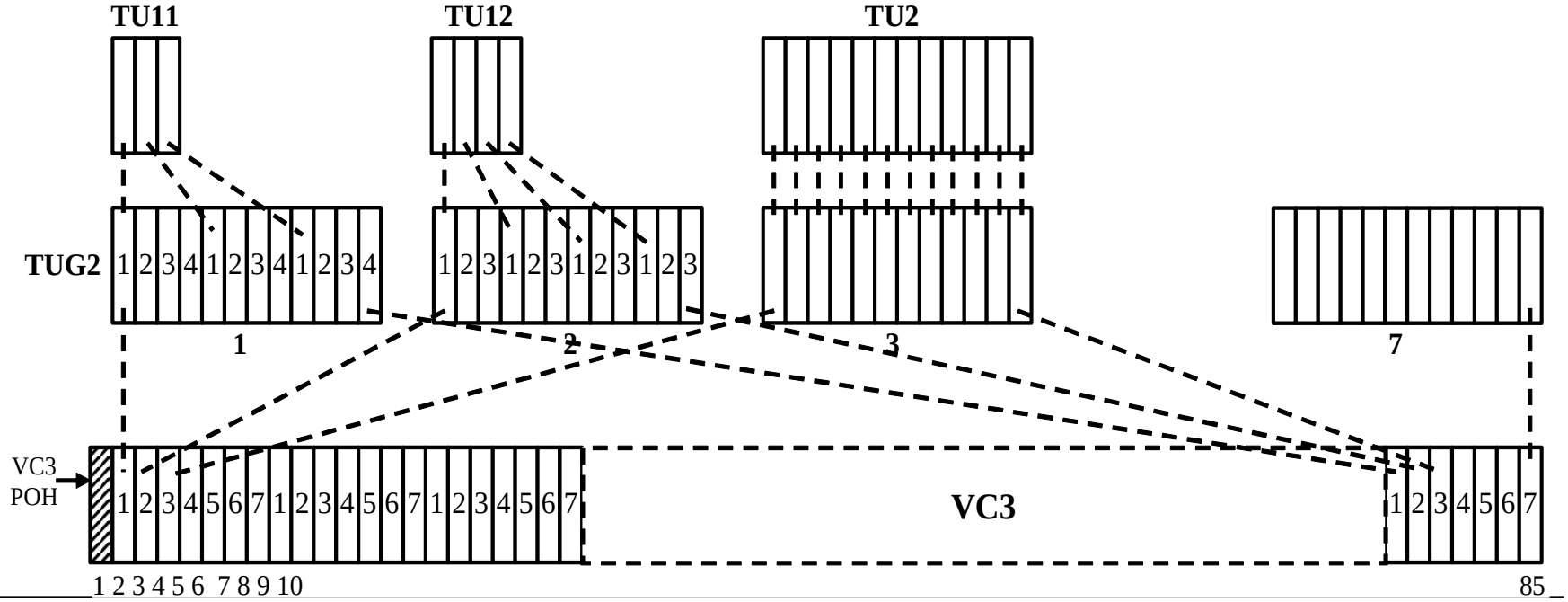

The SDH multiplexing scheme

- Generation of a TU2 multiframe, multiplexing of TUG2 into VC3;

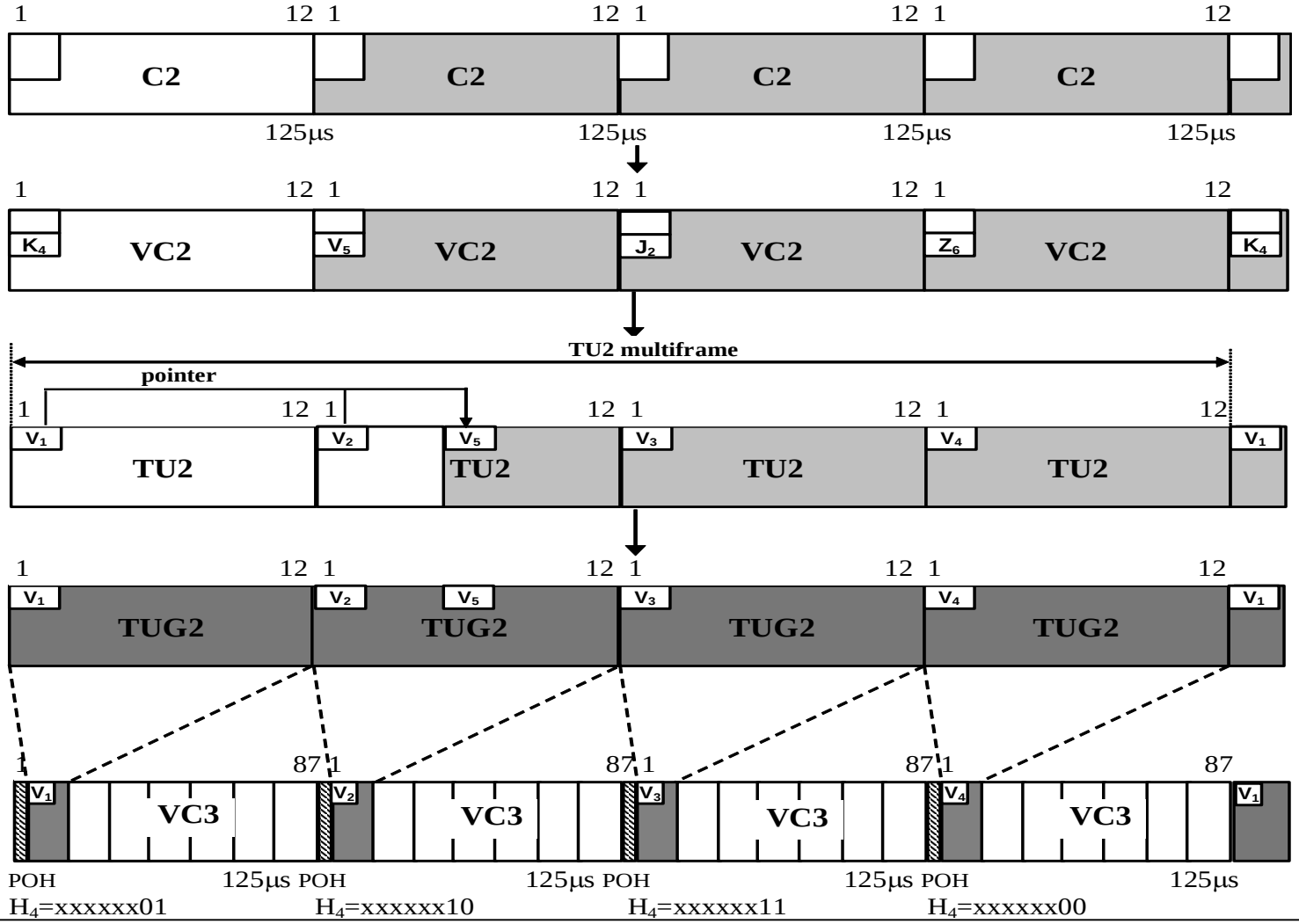

The SDH multiplexing scheme

- Examples:
  - Multiplexing of a 140Mbps PDH signal into a STM-1 transport frame;

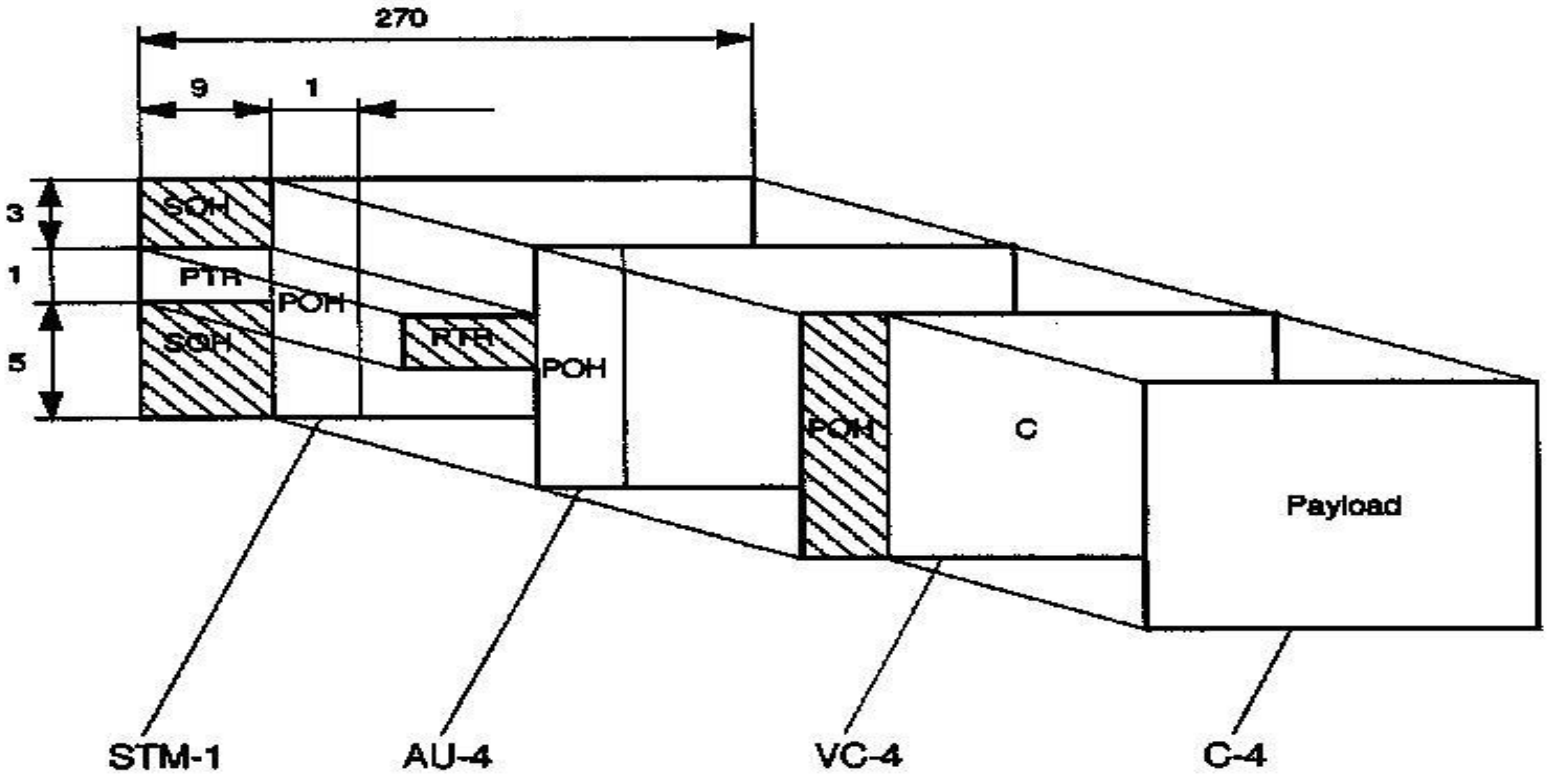

The SDH multiplexing scheme

- Multiplexing of several 2Mbps PDH tributaries into a STM-1 transport frame;

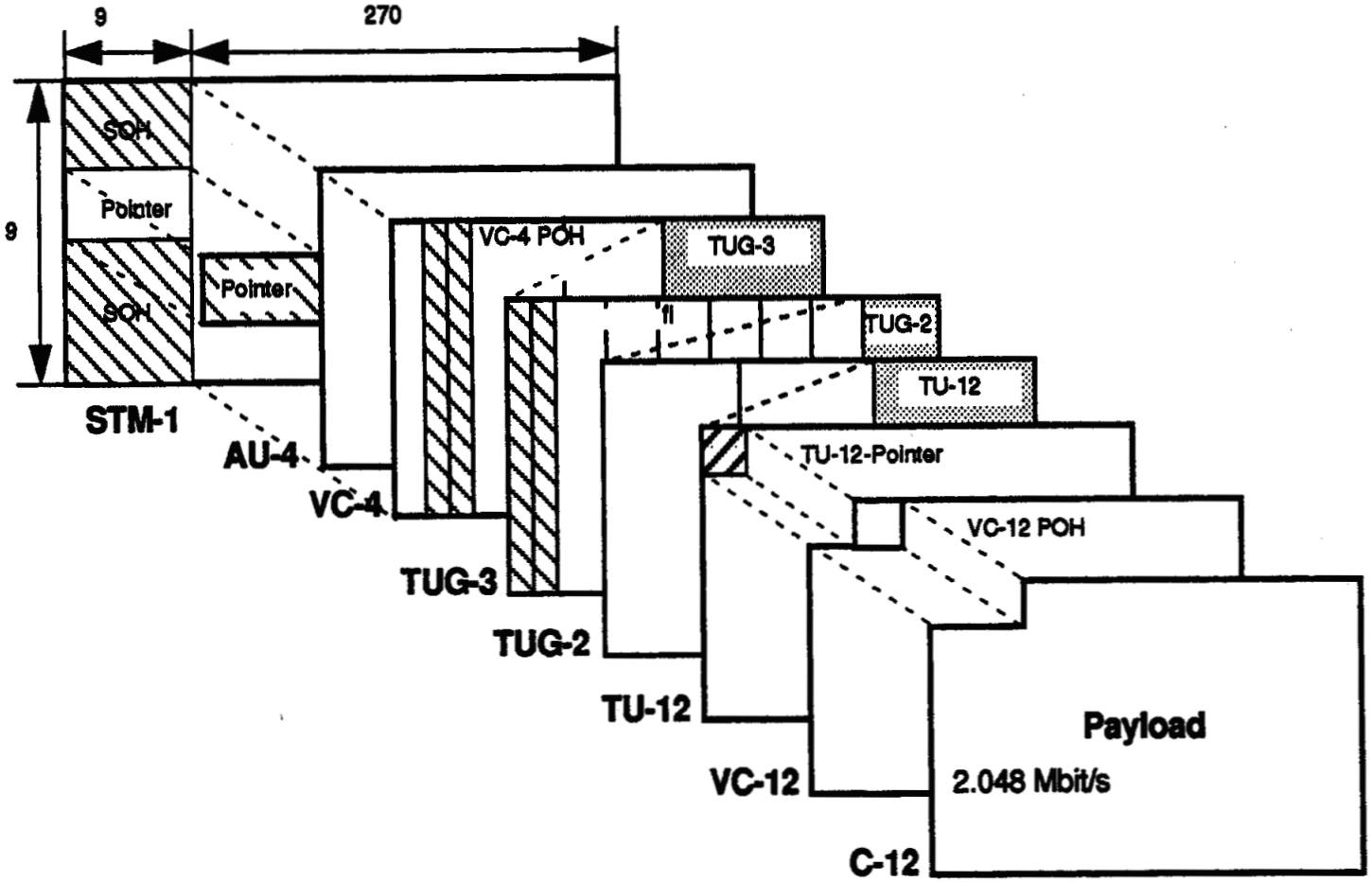

The SONET multiplexing scheme

- The SONET multiplexing scheme for PDH data streams;

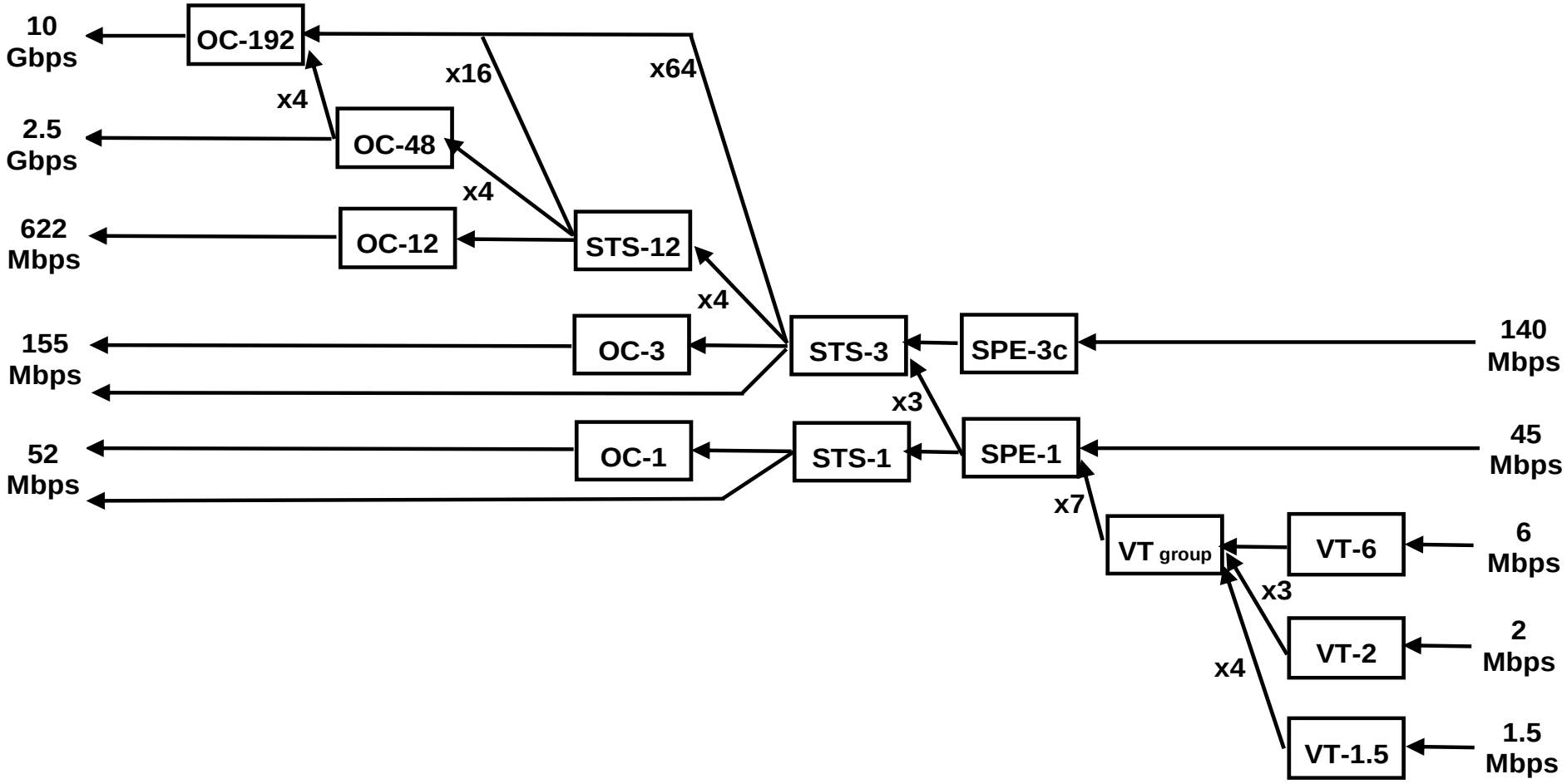

The SONET multiplexing scheme

- Plesiochronous signals with 1,5Mbps rate (DS1 primary PCM frame), 2Mpbs (E1 primary PCM frame) and 6Mbps (DS2 PDH frame) are inserted into VT1.5, VT2 and VT6 units;
- VT units form a VTG group;
- VTG units are multiplexed column by column into SPE (Synchronous Payload Envelope);
- The STS-1 transport frame is formed from the SPE unit by adding a pointer and a Section Overhead (SOH);
- Insertion of a 45Mbps flow, which includes the third PDH level (European + American), can be done directly into the SPE;
- The 140Mbps PDH flow which includes the fourth PDH level (European + American) can be inserted into 3 concatenated SPEs;
- The difference between the OC-x and STS-x units consists only in the type of the carrier;
  - the OC units are transmitted on optical carrier and the STS units on electrical carrier.

The SDH/SONET sections

- There are defined two sections which characterize the transmission of the SDH/SONET transport frames, namely:
  - Regenerator section;
    - located between two consecutive regenerators;
  - Multiplex section;
    - located between two consecutive multiplexers;
- The management and control information necessary for the transmission on these sections is included in the Section Overhead, SOH, associated to transport frames;
  - SOH is divided in two groups, namely:
    - RSOH – Regenerator Section Overhead;
    - MSOH – Multiplex Section Overhead.

The SDH/SONET sections

- The regenerators of the synchronous systems control the quality of the transmission and identify the faults on the line;
  - the information included in the RSOH is processed in each regenerator;
  - the information included in MSOH is processed only in multiplexers;
    - this information is transmitted unaltered through regenerators.

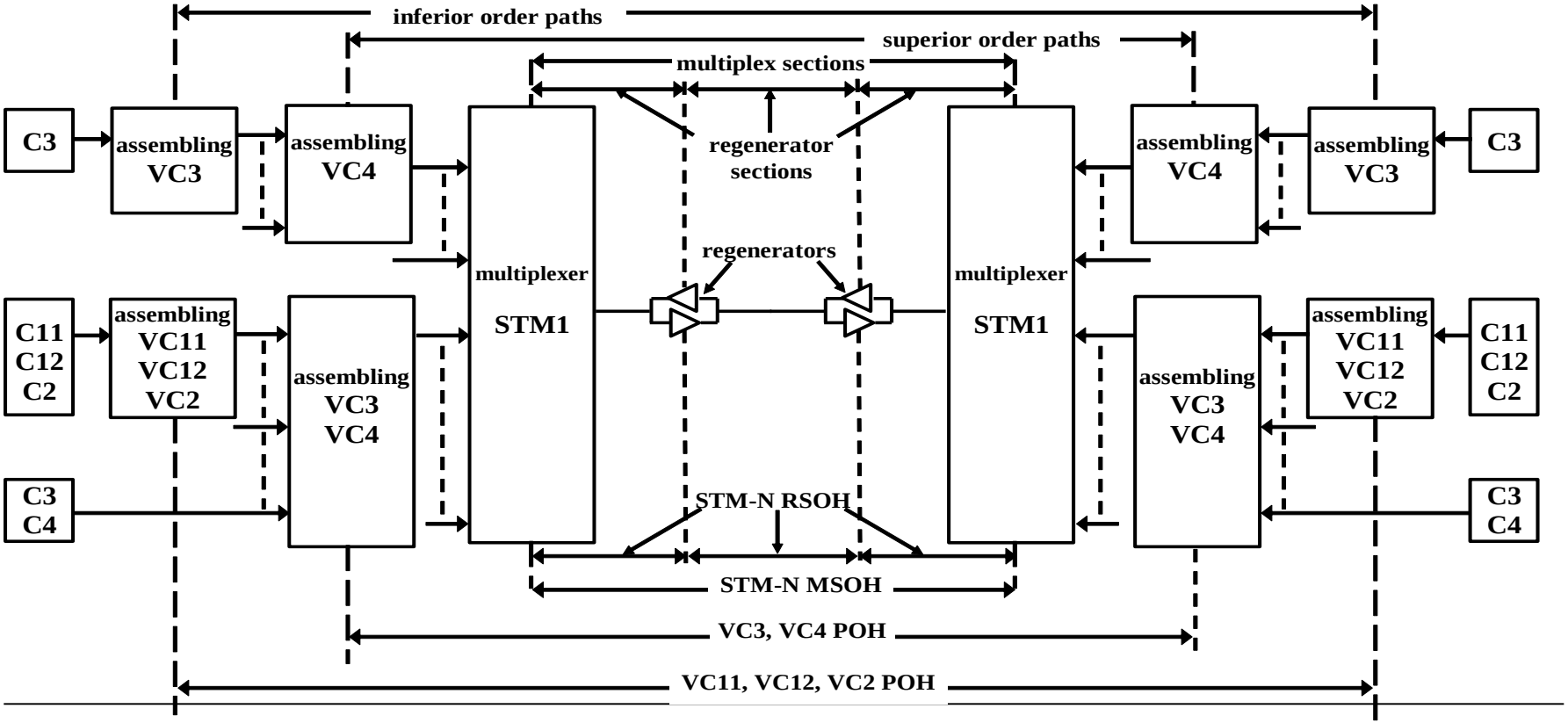

The SDH/SONET sections

- The sections are components of the transmission paths of the containers;
  - Paths are identified by the generation and destination points of the containers;
- The information necessary for the management and the control of the transmission on these paths is included in the path overhead (POH) of the containers;
  - There are two types of paths:
    - inferior order paths;
    - superior order paths;
      - the differences between these paths consist in the bit rates of the units transmitted on these paths and the insertion methods of these units into the transport frames.
  - In the SONET system the inferior order paths are associated to the VT1.5, VT2, VT3 and VT6 units, and the superior order path is associated to the SPE unit.

Error control on the SDH sections

- The quality control of the transmission on the SDH/SONET sections is achieved by monitoring the bit error;
  - The bit error monitoring is based on the BIP-X method (Bit Interleaved Parity-X);
  - The method consists in the addition of the every X^{th} bit transmitted in a transport frame at a given hierarchy level or in a container;
    - after the addition results an error control (detection) structure;
    - the value of the X parameter depends on the type of the frame or of the container;
    - it is practically a parity type method;
      - the obtained result is transmitted in the „overhead" of the next frame or container to the receiver, where the BIP-X is recomputed.
      - it is possible to identify a maximum number of X errors;
        - X = 2 for inferior order containers;
        - X = 8 for superior order containers and RSOH;
        - X = 24 for MSOH;
        - the bits are randomized before the transmission using a scrambler;
        - BIP-X is computed in front of the scrambler and it is inserted in the next frame.

Error control on the SDH sections

- The BIP-8 computation algorithm;

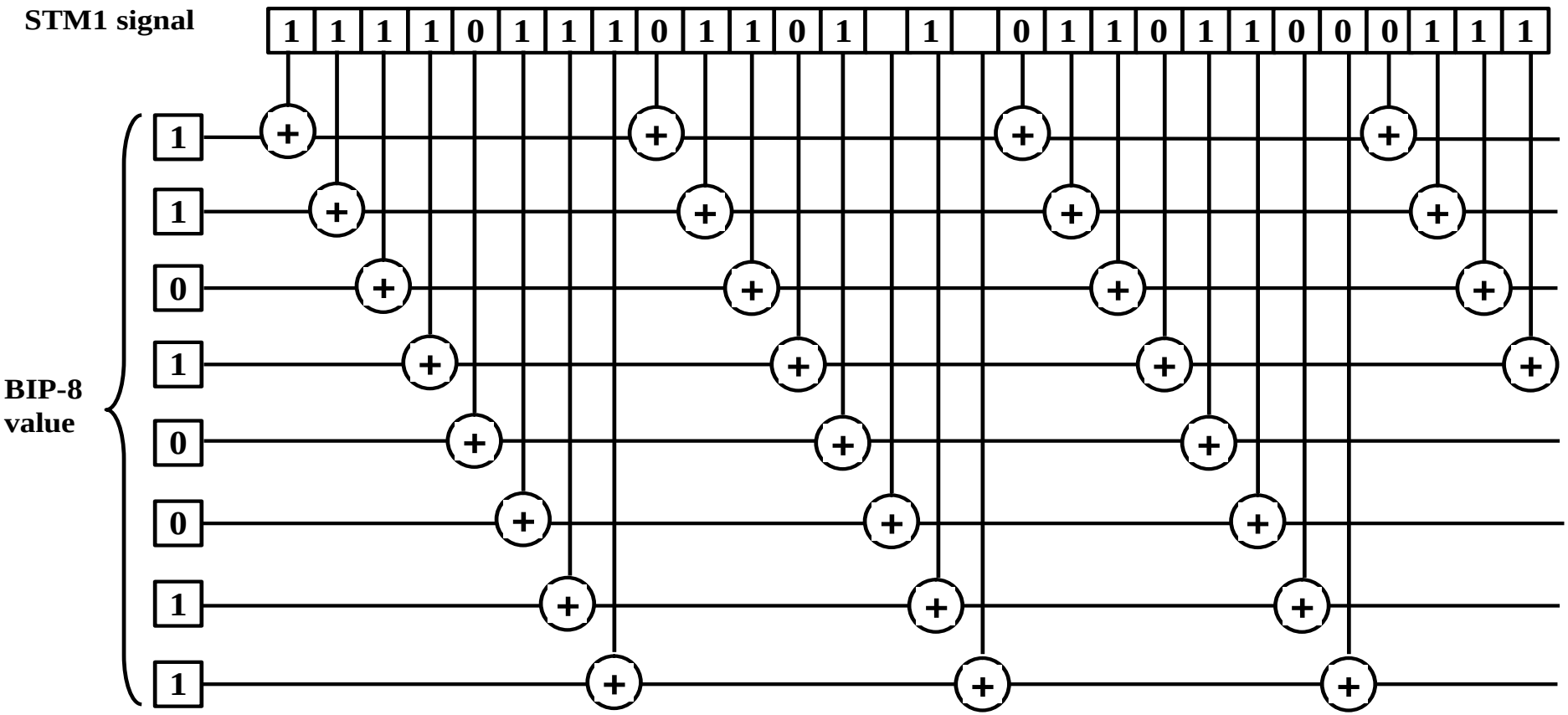

The SDH Overhead information

- Section Overhead (SOH);
  - The structure includes information necessary for:
    - frame synchronization;
    - maintenance;
    - performance (error) monitoring;
    - for different other functions.
  - It is composed of 9 rows and N*9 columns (N=1,4,16);
  - It is structured in the following blocks:
    - Regenerator Section Overhead (RSOH):
      - composed of rows 1 to 3;
      - it is processed in regenerators.
    - Multiplex Section Overhead (MSOH);
      - composed of rows 5 to 9;
      - it is processed in multiplexers;
      - in row 4 is placed the AU pointer.

The SDH Overhead information

- Structure of the STM-1 transport frame's SOH and the structure of the C4 container's POH.

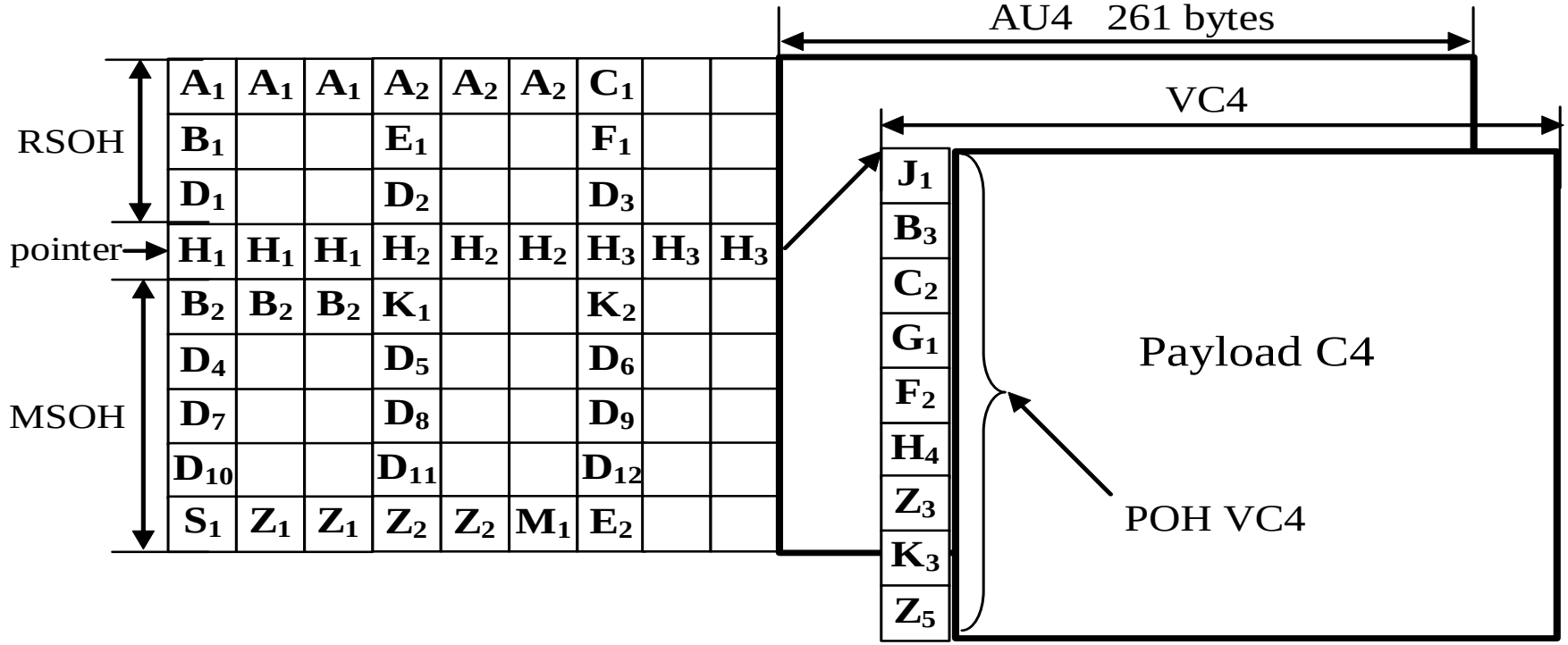

- Structure of the Regenerator Section Overhead (RSOH) bytes:
  - A_1, A_2 ;
    - frame alignment signal A_1=1 1 1 1 0 1 1 0 ; A_2=0 0 1 0 1 0 0 0;

The SDH Overhead information

- C_1 – STM-N identification;
  - can be used to identify a STM-N connection between two multiplexers.
- B_1 - BIP-8 monitoring;
  - defined only in STM-1;
  - it is used for error monitoring in regenerators;
  - it is computed on all bits of the STM-N signal using an even parity and it is inserted in the next frame.
- E_1 – regenerator service channel;
  - defined only in STM-1;
  - it is used to create a service voice channel having a bit rate of 64kbps and this channel is accessible in all regenerators and multiplexers.
- F_1 – user channel;
  - defined only in STM-1;
  - it is reserved for network operations and it is accessible in all regenerators and multiplexers.

The SDH Overhead information

- D_1 , D_2 , D_3 – data communication channel;
  - defined only in STM-1;
  - form a common data communication channel DCC_R with a 192kbps bit rate;
    - channel dedicated to management information exchange between regenerators.
- Structure of the Multiplex Section Overhead (MSOH) bytes;
  - B_2 – BIP-N*24 monitoring;
    - N*3 bytes are used for error monitoring in the multiplexer section;
    - it is computed in such a way to obtain an even parity on all bits of the STM-N frame, excepting the RSOH;
    - it is inserted in the next frame.
  - K_1 , K_2 – automatic protection switching;
    - defined only in STM-1;
    - it is used for the control of the automatic protection switching;
    - the structure of these bytes is defined for several protection configurations.

The SDH Overhead information

- $D_4 ... D_{12}$ – data communication channel DCC;
  - 8 bytes form a common data channel DCC_M with a 576kbps bit rate for the multiplex section.
- S_1 – synchronization status;
  - defined only in STM-1;
  - informs the operator about the performance of the clock used in the unit.
- Z_1 , Z_2 – N*4 bytes reserved for subsequent applications;
- M_1 – distant error indication for the multiplex section;
- E_2 – multiplexer service channel;
  - defined only in STM-1;
  - forms a service voice channel accessible only in the multiplexers.

- Section Overhead (SOH) together with the useful data (SPE) compose a STS-1 frame in the SONET system;
  - The size of the overhead is three times smaller than the SOH of the SDH system.

The SONET Overhead information

- Structure of the SONET system STS-1 transport frame SOH and of the POH associated to SPE container;
  - Essential differences consist in:
    - the pointer has only 3 bytes;
    - the error monitoring in MSOH is done using a single byte;
    - the frame alignment signal has only 2 bytes;
    - there are missing some reserved bytes of the STM-1 SOH.

Section overhead	1	A_1	A_2	J_0/Z_0	J_1
	2	B_1	E_1	F_1	B_3
	3	D_1	D_2	D_3	C_2
Line overhead	4	H_1	H_2	H_3	G_1
	5	B_2	K_1	K_2	F_2
	6	D_4	D_5	D_6	H_4
	7	D_7	D_8	D_9	Z_3
	8	D_{10}	D_{11}	D_{12}	K_3
		S_1/Z_1	M_0 or $M_1/Z2$	D_{12}	Z_5

Transport overhead Path

The SDH POH information

- Path Overhead (POH);
  - Together with the container C form the virtual container VC;
  - For the superior order containers there are available 9 byres (a column) per container;
  - For inferior order containers it is available only 1 byte per container;
  - POH is composed at the generation of the container and remains unchanged until the container is disassembled;
  - POH is the same for the SDH and SONET containers for both inferior and superior containers;
  - The bytes of the high order SDH containers are defined as follows:
    - J_1 – path trace;
      - it is the access point in the virtual container;
      - it is used to transmit a path check sequence.

The SDH POH information

- B_3 – BIP-8 monitoring;
  - error monitoring over the entire path;
  - it is computed over all bits of the current VC-3 or VC-4 to obtain an even parity;
  - it is inserted in the next frame.
- C_2 – content identifier of the VC;
- G_1 – path status
  - sent by the receiver to the transmitter with data related to the transmission quality;
    - remote error indication;
    - remote defect indication.
- F_2 – user channel – 64kbps channel available for communication between the path ends for user purposes;
- H_4 – multi-frame indicator;
  - used for lower order multi-frame synchronization.
- Z_3 – user channel;
  - 64kbps channel available for communication between path ends.
- K_3 – automatic protection switching;
  - ensures the control of the protection switching process on higher order paths.
- Z_5 – network operator byte – it is provided for management purposes.

The SDH POH information

- POH associated to low order containers (VC-1/VC-2);
  - Composed of 4 bytes inserted into a multiframe composed of 4 VC units;
    - each VC unit has allocated one byte for POH.
  - Composed of bytes V_5, J_2, Z_6, K_4;
    - V_5 is the first byte in VC-1/VC-2;
      - is the reference point for the lower order containers;
      - is used to transmit the following information:
        - BIP-2 monitoring;
        - remote error indication;
        - remote defect identification.
    - J_2 – path trace;
      - identical with byte J_1 of the higher-order POH;
      - a digital sequence is transmitted to check the link over the entire communication path.
    - K_4 – automatic protection switching on lower order paths;
    - Z_6 – unused – spare byte.

Pointer operations

- The pointers used in the administrative and tributary units of the synchronous SDH/SONET systems have two main roles:
  - Establishment of the phase relation between the containers carrying payload data and the administrative and tributary units;
    - it is established the phase relation between containers and the transport frame;
  - Bit rate adaptation between the data streams received by a multiplexer and the streams transmitted by the multiplexer in the situation of interruption of the synchronization link;
    - dynamic establishment of the position of containers in different units and implicitly in the transport frame;
    - it is ensured an easy insertion / extraction of different elementary streams into / from the transport frame, without being necessary the demultiplexing and remultiplexing of the entire multiplex stream;
      - this situation is encountered in the case of PDH systems;
    - it is ensured a flexible and efficient use of the transmission capacity for a wide range of services with various characteristics.

Pointer operations

- The container loaded in the transport frame can start anywhere (practically can be some restrictions);
  - the starting position is given by the pointer value;
  - the container can extend over two units (administrative or tributary units, according to the considered case);
- Establishment of the position of a VC4 container relatively to the beginning of the STM-1 frame by using the AU4 pointer;

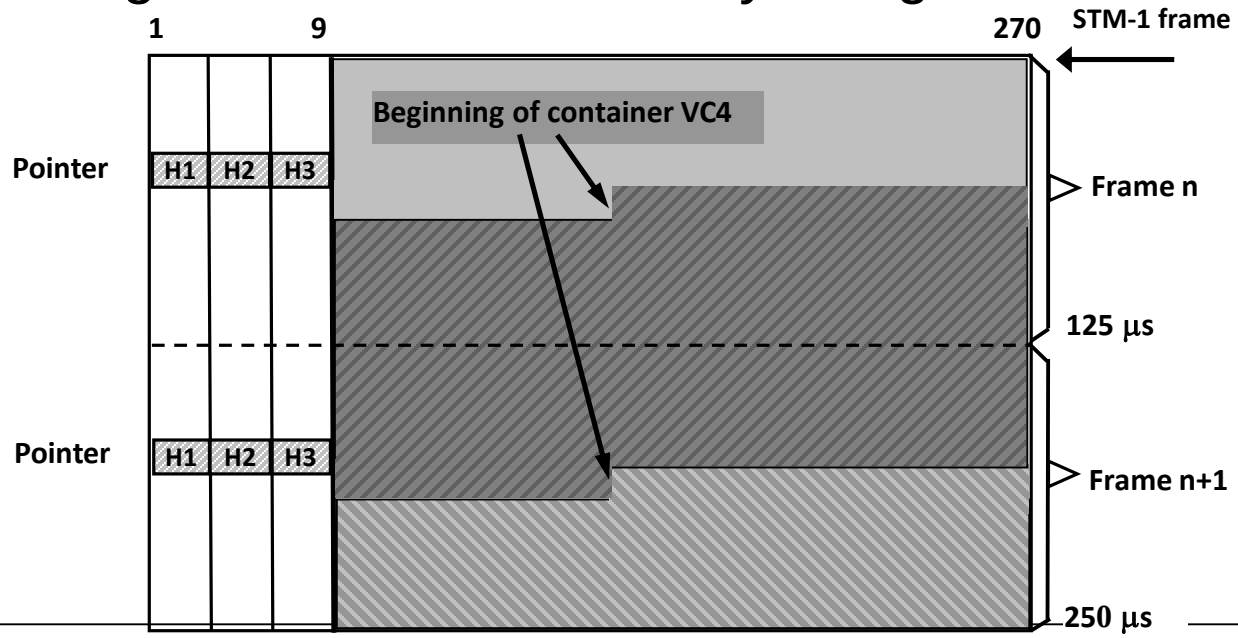

Pointer operations

- The pointer includes three or four bytes;
  - Three bytes in the case of the SDH administrative units;
  - Four bytes in the case of the SDH tributary units;
    - only the first two bytes (H1 and H2) give the position of the container;
    - the third byte (H3) is reserved for negative justification operations;
    - the fourth byte, if exists, has no defined role.
  - In SOH STM-1 there are reserved 9 bytes for pointer;
    - if in STM-1 is loaded a VC4 container we have a single pointer on two bytes plus three positions for negative justification (the other bytes are not used)
      - each position in AU4 is composed of three bytes;
    - if three VC3 containers are loaded in STM-1, three pointers are used
      - each position in AU3 is composed of a single byte.

Pointer operations

- Structure of the AU3 pointers and the position of these pointers inside the STM-1 transport frame;
  - Numbering of positions inside the STM-1 frame in the case of loading of three AU3 units;

	1	2	3	4	5	6	7	8	9	10	11	12	13	14	15	16	17	18		265	266	267	268	269	270
1										522	522	522	523	523	523	524	524	524	…..	607	607	607	608	608	608
2										609	609	609	610	610	610	611	611	611	…..	694	694	694	695	695	695
3										696	696	696	697	697	697	698	698	698	…..	781	781	781	782	782	782
4	H1	H1	H1	H2	H2	H2	H3	H3	H3	0	0	0	1	1	1	2	2	2	…..	85	85	85	86	86	86
5										87	87	87	88	88	88	89	89	89	…..	172	172	172	173	173	173
6										174	174	174	175	175	175	176	176	176	…..	259	259	259	260	260	260
7										261	261	261	262	262	262	263	263	263	…..	346	346	346	347	347	347
8										348	348	348	349	349	349	350	350	350	…..	433	433	433	434	434	434
9										435	435	435	436	436	436	437	437	437	…..	520	520	520	521	521	521
1										522	522	522	523	523	523	524	524	524	…..	607	607	607	608	608	608
2										609	609	609	610	610	610	611	611	611	…..	694	694	694	695	695	695
3										696	696	696	697	697	697	698	698	698	…..	781	781	781	782	782	782
4	H1	H1	H1	H2	H2	H2	H3	H3	H3	0	0	0	1	1	1	2	2	2	…..	85	85	85	86	86	86
5										87	87	87	88	88	88	89	89	89	…..	172	172	172	173	173	173

Pointer operations

- Structure of the AU4 pointers and the position of these pointers inside the STM-1 transport frame;
  - Numbering of positions inside the STM-1 frame in the case of loading of one AU4 units;

	1	2	3	4	5	6	7	8	9	10	11	12	13	14	15	16	17	18		265	266	267	268	269	270
1										522	-	-	523	-	-	524	-	-	.....	607	-	-	608	-	-
2										609	-	-	610	-	-	611	-	-	.....	694	-	-	695	-	-
3										696	-	-	697	-	-	698	-	-	.....	781	-	-	782	-	-
4	H1	H1	H1	H2	H2	H2	H3	H3	H3	0	-	-	1	-	-	2	-	-	.....	85	-	-	86	-	-
5										87	-	-	88	-	-	89	-	-	.....	172	-	-	173	-	-
6										174	-	-	175	-	-	176	-	-	.....	259	-	-	260	-	-
7										261	-	-	262	-	-	263	-	-	.....	346	-	-	347	-	-
8										348	-	-	349	-	-	350	-	-	.....	433	-	-	434	-	-
9										435	-	-	436	-	-	437	-	-	.....	520	-	-	521	-	-
1										522	-	-	523	-	-	524	-	-	.....	607	-	-	608	-	-
2										609	-	-	610	-	-	611	-	-	.....	694	-	-	695	-	-
3										696	-	-	697	-	-	698	-	-	.....	781	-	-	782	-	-
4	H1	H1	H1	H2	H2	H2	H3	H3	H3	0	-	-	1	-	-	2	-	-	.....	85	-	-	86	-	-
5										87	-	-	88	-	-	89	-	-	.....	172	-	-	173	-	-

Pointer operations

- The use of the pointers in the SDH/SONET systems creates the possibility to maintain the synchronous character of the connection in the situation when the clock connection is interrupted;
  - It is used the positive or negative justification according to the difference between the value of the local clock frequency and the frequency of the input stream;
    - byte H3 of the pointers facilitates the negative justification;
    - the justification is combined with the change of the container's starting position in the transport frame or in other SDH/SONET units;
      - it is about administrative or tributary units;
- Example:
  - It is considered the case of the STM-1 transport frame which carries a VC4 container;
  - It exists a difference between the local clock of the multiplexer and the received signal;
    - it is used a positive or negative justification process for phase adjustment.

Pointer operations

- Rate adjustment between the STM-1 frame of the multiplexer and a VC4 container received with a lower frequency;
  - it is used a positive justification at byte level;
  - the justification position is the first position after byte H3;.
  - the pointer is increased with one unit.

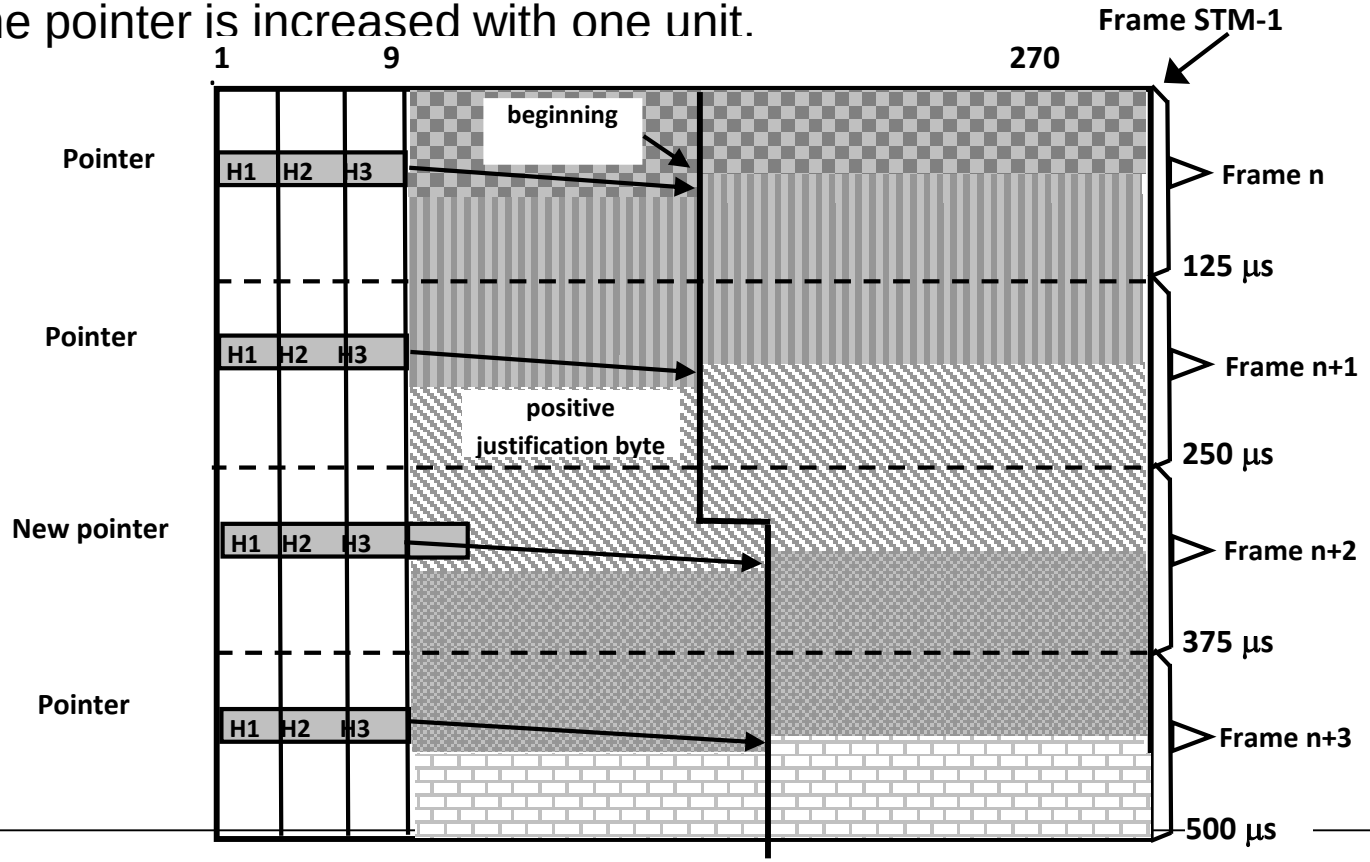

Pointer operations

- Rate adjustment between the STM-1 frame of the multiplexer and a VC4 container received with a larger frequency;
  - it is used a negative justification at byte level;
  - the justification position is the H3 byte position included in the pointer;.
  - the pointer is decreased with one unit.

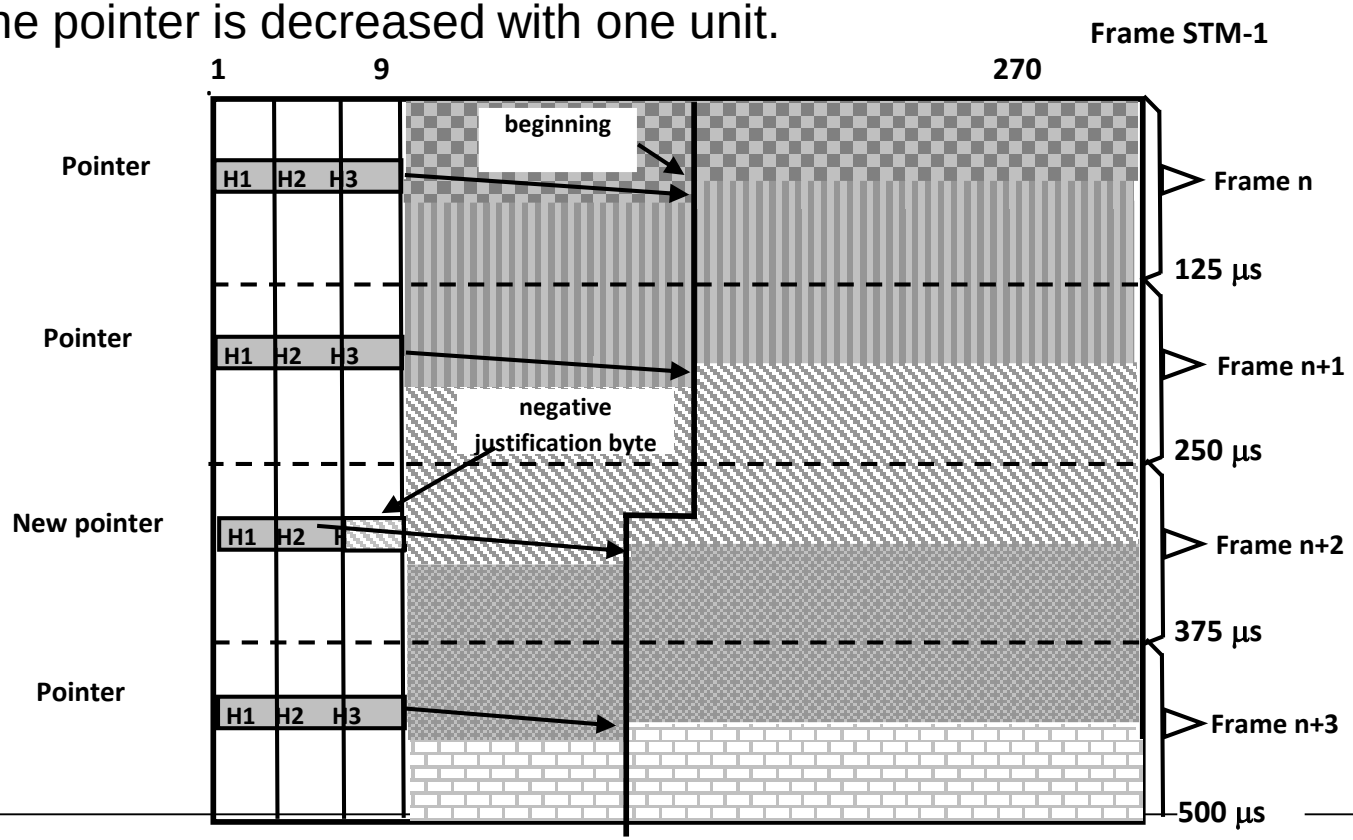

- Structure of the H_1 and H_2 bytes of the SDH administrative units pointer;

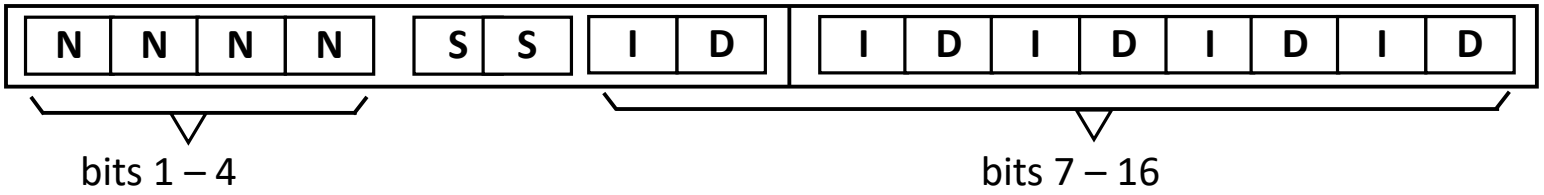

- The significance of the bits of the word composed of bytes H1 and H2 is the following:
  - bits 1 – 4 form the NDF (New Data Flag);
    - indicates the change of the pointer value;
    - there are defined two values:
      - NDF=0110 (non active) – it is maintained the value of the pointer;
      - NDF=1001 (active) – it is specified a new value for the pointer;
  - bits 5 and 6 called S S;
    - identify the pointer type - they have the value 1 0 in the case AU pointer;
  - bits 7 – 16 represents the value of the pointer;

SDH pointer structure

- If a new value is attributed to the pointer then bits 7 – 16 contain effectively the value of the pointer;
- If it is about frequency matching then the pointer value must be incremented or decremented;
  - bits 7 – 16 are divided in two groups, of increment bits (I) and respectively of decrement bits (D);
  - there are 5 bits in each group and if the pointer must be incremented the I bits are inverted, and if the pointer must be decremented the D bits are inverted;
  - identification of the pointer incrementing and decrementing operations is achieved based on a majority logic which takes into consideration the changes of I and D bits;
    - this signaling method of the pointer modification ensures some error protection in the case of a low bit error probability channel;
    - there is also some error protection of the NDF bits;
      - the Hamming distance between the codes associated to active and inactive states is 4.
  - the modification of the pointer value can be realized at most once in 4 units;
    - if we have a pointer adjustment in one unit or transport frame then in the following three units or transport frames there are not allowed pointer adjustments;

SDH pointer structure

- In the case of concatenation of AU4 units, the first AU has a normal pointer and the following units include a concatenation indication CI
  - these units must be processed like the first unit; bits H_1 and H_2 are defined as: H_1 : 1 0 0 1 S S 1 1 (S – undefined), H_2 : 1;

- The TU3 pointer allows a dynamic adaptation of the VC3 container phase to the TU3 frame;
  - The TU3 pointer is located in the first column of the unit and is composed also of bytes H_1, H_2 and H_3;
  - The structure of this pointer and the operations suported are identical with the structure and operations of the AU pointers;
    - the TU3 unit is identical as dimensions with the TUG3 unit;
    - if in the TUG3 unit are multiplexed TUG2 units, which have a fix phase relation with the TUG3 frame, the positions corresponding to bytes H_1 and H_2 of the pointer are replaced with NPI (Null Pointer Indicator);
      - NPI has the structure: 1 0 0 1 S S 1 1 1 1 1 0 0 0 0 0 (S – undefined).

SDH pointer structure

- Structure of the TU3 pointer and its position in this unit. The numbering of TU3 positions;

		1	2	3	4	5	6	7	8	9	10		81	82	83	84	85	86
1	H1	595	596	597	598	599	600	601	602	603	…..		674	675	676	677	678	679
2	H2	680	681	682	683	684	685	686	687	688	…..		759	760	761	762	763	764
3	H3	0	1	2	3	4	5	6	7	8	…..		79	80	81	82	83	84
4	STUFFING	85	86	87	88	89	90	91	92	93	…..		164	165	166	167	168	169
5		170	171	172	173	174	175	176	177	178	…..		249	250	251	252	253	254
6		255	256	257	258	259	260	261	262	263	…..		334	335	336	337	338	339
7		340	341	342	343	344	345	346	347	348	…..		419	420	421	422	423	424
8		425	426	427	428	429	430	431	432	433	…..		504	505	506	507	508	509
9		510	511	512	513	514	515	516	517	518	…..		589	590	591	592	593	594
1	H1	595	596	597	598	599	600	601	602	603	…..		674	675	676	677	678	679
2	H2	680	681	682	683	684	685	686	687	688	…..		759	760	761	762	763	764
3	H3	0	1	2	3	4	5	6	7	8	…..		79	80	81	82	83	84
4	ST	85	86	87	88	89	90	91	92	93	…..		164	165	166	167	168	169
5		170	171	172	173	174	175	176	177	178	…..		249	250	251	252	253	254

SDH pointer structure

- The TU2 pointer;
  - Allows a dynamic adaptation of the VC2 container phase to the phase of the TU2 frame;
  - It is composed of 4 bytes: V_1, V_2, V_3 and V_4;
    - these 4 bytes are located in 4 consecutive TU2 frames, frames which compose a multiframe (see figure 14).
    - bytes V1 and V2 are equivalent with bytes H1 and H2 and give effectively the value of the pointer;
    - byte V3 is used for negative justification operations, similar to byte H3 of the AU pointers;
    - the structure of byte V4 is undefined.
  - The definition of the pointer byte available in a TU2 frame is given by byte H_4 – multiframe indicator – of POH VC3 and POH VC4.

SDH pointer structure

- Structure of the TU2 pointer and its position in this unit. Numbering of the TU2 unit positions;

V1	321	322	....	426	427	V2	0	1	....	105	106	V3	107	108	....	212	213	V4	214	215	....	319	320

- The TU11 pointer;
  - Allows a dynamic adaptation of the VC11 container phase to the phase of TU11 frame;
  - The structure of this pointer is identical with that of the TU2 pointer;
  - The insertion/extraction of data into/from TU11 multiframe and the multiplexing in superior units is realized like in the case of TU2 units;
- Structure of the TU11 pointer and its position in this unit. Numbering of the TU11 unit positions;

V1	78	79	....	102	103	V2	0	1	....	24	25	V3	26	27	....	50	51	V4	52	53	....	76	77

SDH pointer structure

- The TU12 pointer;
  - Allows a dynamic adaptation of the VC12 container phase to the phase of the TU12 frame;
  - The structure of this pointer is identical with that of theTU2 pointer;
  - The insertion / extraction of data into / from TU12 multiframe and the multiplexing in superior units is realized like in the case of TU2 units;
- Structure of the TU12 pointer and its position in this unit. Numbering of the TU12 unit positions;

V1	105	106	....	138	139	V2	0	1	....	33	34	V3	35	36	....	68	69	V4	70	71	....	103	104

- The insertion and extraction of data is realized using a multiframe composed of 4 units;
  - The multiframe has a vector type structure;
    - the zero position in this multiframe is the first position after byte V2;
    - the pointer value specifies the position where is inserted the group of 4 containers.

SDH pointer structure

- After the insertion of the useful information, the vector type structure is transformed into a structure composed of 4 matrices;
  - each matrix has in the position located in the upper left corner a pointer byte;
- The multiplexing of the TU units into the superior units is realized byte by byte and column by column;
- At the reception side the TU matrices are extracted from the superior units by column by column demultiplexing; the group of 4 consecutive matrices is transformed into the vector structure;
  - the information is extracted starting with the position specified by the pointer.
- For the transport of the nonhierarchical PDH bit rates, several TU2 multiframes can be concatenated;
- It is possible in this way the transport of information with bit rates multiples of the VC2 bit rate in concatenated VC2-mc containers
- In the case of the SONET system the operations with STS-1 and the VT pointers are similar with the pointer of AU3 SDH units.

Mapping of the PDH flows into SDH containers

- To transport the PDH flows in the SDH/SONET synchronous systems it is necessary an appropriate mapping of these flows in containers;
  - The mapping has to solve the problem of rate matching between the local clock of the multiplexer and the received flow;
    - for each PDH flow exists a separate mapping algorithm that uses, usually, positive justification for rate matching between the multiplexer and the received plesiochronous flow.
  - There are two categories of mapping algorithms, namely:
    - synchronous mapping:
      - insertion of the bits from the plesiochronous flows into the appropriate containers is realized using the clock extracted from the received flow;
      - rate matching between the formed containers and the synchronous transport frames is achieved with the help of the transport units pointers:
        - tributary units pointers in the case of low order containers;
        - administrative units pointers in the case of high order containers.

Mapping of the PDH flows into SDH containers

- asynchronous mapping:
  - insertion of the bits from the plesiochronous flows into the appropriate containers is realized using the local clock of the multiplexer;
  - rate matching is realized with the help of positive justification;
    - it is the most used mapping method being more easy to be implemented;
    - there are not necessary continuous pointer operations only for mapping of the plesiochronous tributaries.

- **Asynchronous mapping of a 140Mbps rate flow into a VC4 container;**
- It is used the following algorithm:
  - VC4 is composed of 261 columns each of 9 rows; the first column contains the POH and the rest compose the C4 container;
  - The 260 columns and 9 rows matrix structure (the C4 container) intended for payload is processed as follows:
    - each row is split in 20 blocks of 13 bytes each;
      - a total number of 180 blocks are obtained.

Mapping of the PDH flows into SDH containers

- The structure of a VC4 container used in the asynchronous mapping of a plesiochronous tributary having rate 140Mbps;

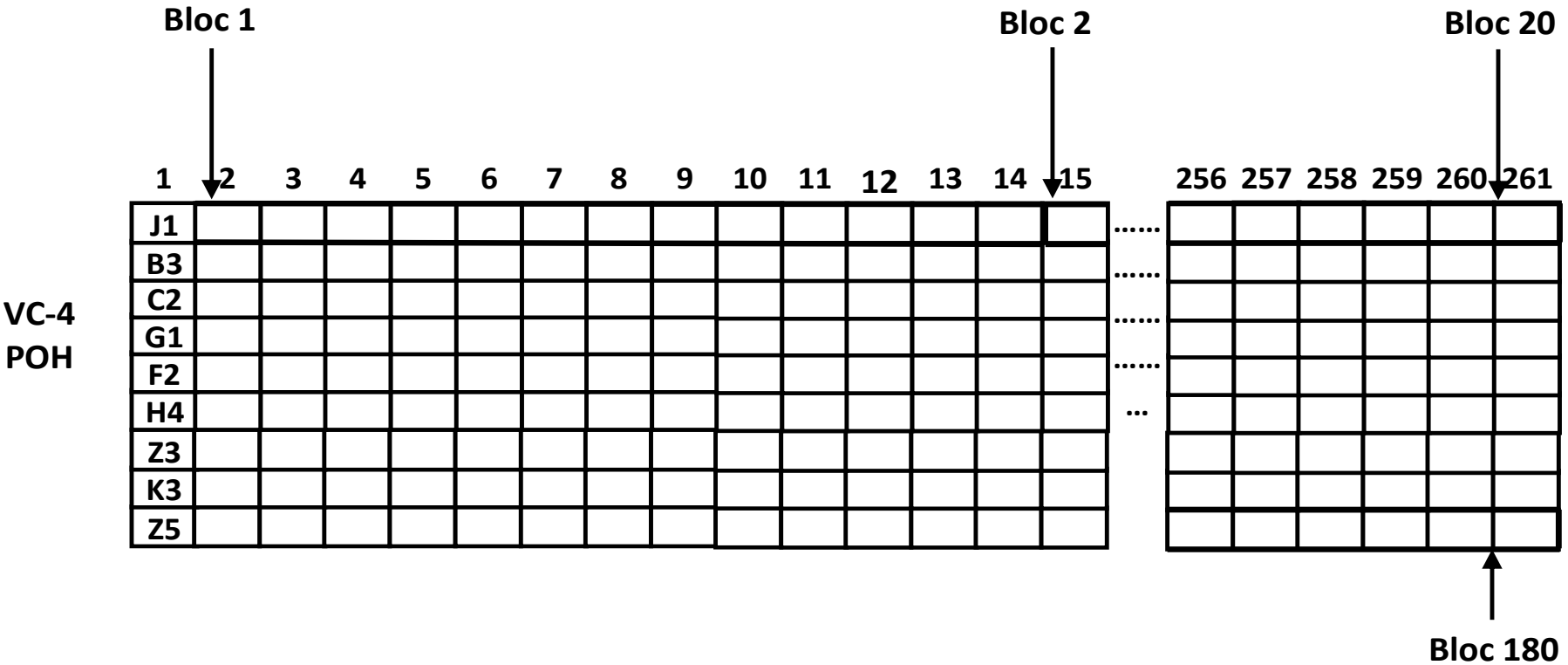

- The first byte of each block is a special one, and the next 12 bytes are used for information;
  - we have 96 information bits per block.

Mapping of the PDH flows into SDH containers

- The special bytes are called W, X, Y and Z and have the following roles:
  - W is a normal information byte;
  - Y is a stuffing byte with undefined structure;
  - X is a byte having the structure: C R R R R R O O:
    - bits O are used as control overhead for the PDH flow;
    - bits R are fixed stuffing bits;
    - C is a justification control bit, which indicates if the possible justification position from the considered row contains information bit (C=0) or justification (C=1);
    - byte X is transmitted 5 times in a row;
      - there are available 5 justification control bits;
      - identification of the justification operation is realized based on a majority logic decision applied to the C bits.
  - Z byte having the structure: I I I I I I I S R:
    - bits I are information bits;
    - bit R is a fixed stuffing bit;
    - bit S is a possible justification bit.

Mapping of the PDH flows into SDH containers

- Structure of a row of the C4 container used in the asynchronous mapping process of a 140Mbps PDH flow;

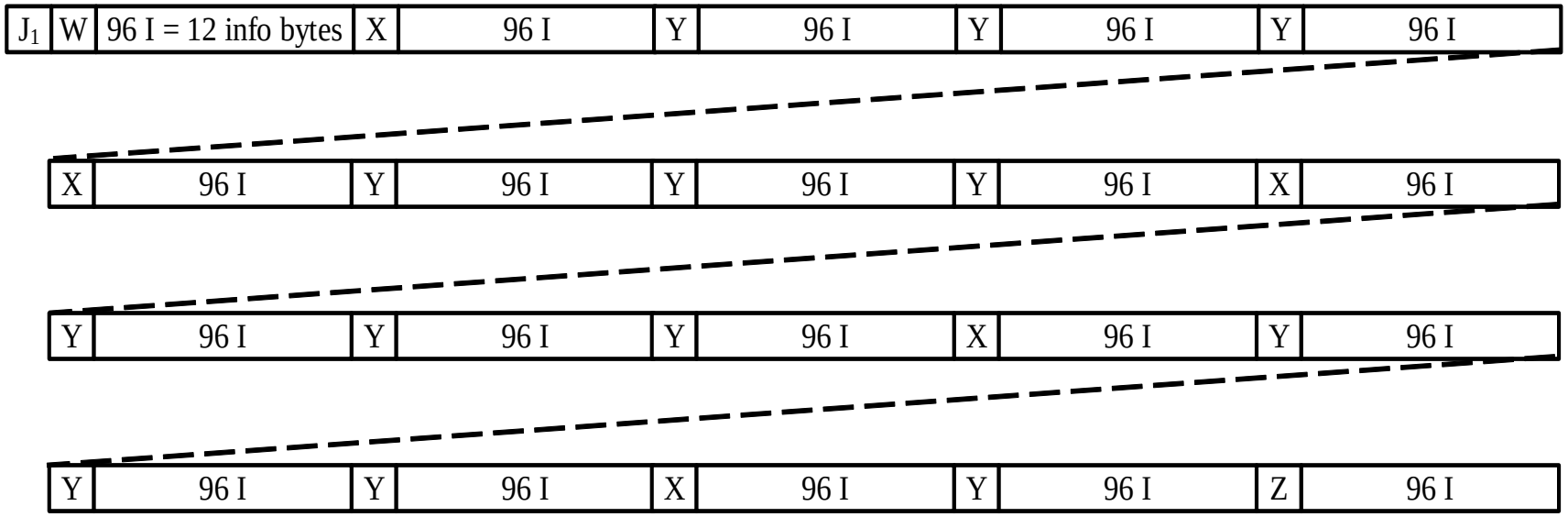

- The mapping process ensures the following characteristics of the VC4 SDH flow:
  - total bit rate (of the payload area) VC4 = 149760kbps;
  - useful nominal rate f_s = 139264kbps;
    - it is obtained by transmitting 2 information bits and 7 justification bits in the 9 possible justification positions of a VC 4 container.

Mapping of the PDH flows into SDH containers

- useful rate without the justification positions (the possible justification positions contain effectively justification bits) =139248kbps=f_s-1.15 × 10^{-4}×f_s;
- useful rate with justification positions (the possible justification positions contain information bits) = 139320kbps= f_s+4.02 × 10^{-4}×f_s.

- Bit allocation in the C4 container in the asynchronous mapping of a PDH tributary having bit rate 140Mbps;

Bytes / row	Information bits / row	Stuffing bits / row	Justification ctrl. bits / row	Justification bits / row	Overhead bits / row
240 – info. 1 – W 13 – Y 5 – X 1 - Z	1920 8 - - 6	- - 104 25 1	- - - 5 -	- - - - 1	- - - 10
Bytes / VC4	Info. bits /VC4	Stuffing bits / VC4	Justification ctrl. bits/VC4	Justification bits / VC4	Overhead bits / VC4
260×9=2340	1934×9=17406	130×9=1170	5×9=45	1×9=9	10×9=90
Rate (kbps)	139248	9360	360	72	720
Total rate VC4 (without POH) = 149760 kbps					

Mapping of the PDH flows into SDH containers

- **Asynchronous mapping of a 34Mbps rate into a VC3 container;**
- It is used the following algorithm:
  - The VC3 container is composed of 85 columns and 9 rows, the first column is occupied by the POH while the rest form C3;
  - The matrix having 84 columns and 9 rows (i.e., container C3), obtained after suppressing POH is processed in the following way:
    - are generated 3 partial frames, each composed of 3 rows and 84 columns;
    - the structure of the 3 partial frames is identical.
  - A partial frame includes:
    - bytes with information bits;
    - bytes with stuffing bits;
    - special bytes – bytes A, B and C;
      - bytes A and B includes, each of them, one possible justification bit, bits S_1 and S_2;
      - bytes C (5 bytes) include, each of them, 2 justification control bits, C_1 and C_2;
      - there are 5 C_1 and 5 C_2 bits, the identification of justification on the bits S_1 and S_2 is realized based on a majority decision applied to the justification control bits.

Mapping of the PDH flows into SDH containers

- Structure of the C3 container used in the asynchronous mapping process of a 34Mbps PDH flow;

	1	2	3	4	5	6	7	8	9	10		80	81	82	83	84	85	
	J1										.....							Partial frame 1
	B3										.....							
	C2										.....							
VC-3 POH	G1																	Partial frame 2
	F2																	
	H4																	
	Z3																	Partial frame 3
	K3																	
	Z5																	

- The mapping process ensures the following characteristics of the VC3 SDH flow:
  - total bit rate debit (of the payload area) VC3 = 48384kbps;
  - useful nominal rate f_s = 34368kbps;
    - it is obtained by transmitting one information and one justification bit in the 2 possible justification positions of a partial frame;
    - there are used 3 information and 3 justification bits per VC3 container.

Mapping of the PDH flows into SDH containers

- useful rate without the justification positions (the possible justification positions contain effectively justification bits) = 34344kbps = f_s-7×10^{-4}×f_s;
- useful rate with justification positions (the possible justification positions contain information bits) 139320kbps = 34392kbps = f_s+7×10^{-4}×f_s.

- Structure of a partial frame of the C3 container used in the asynchronous mapping process of a 34Mbps PDH flow;

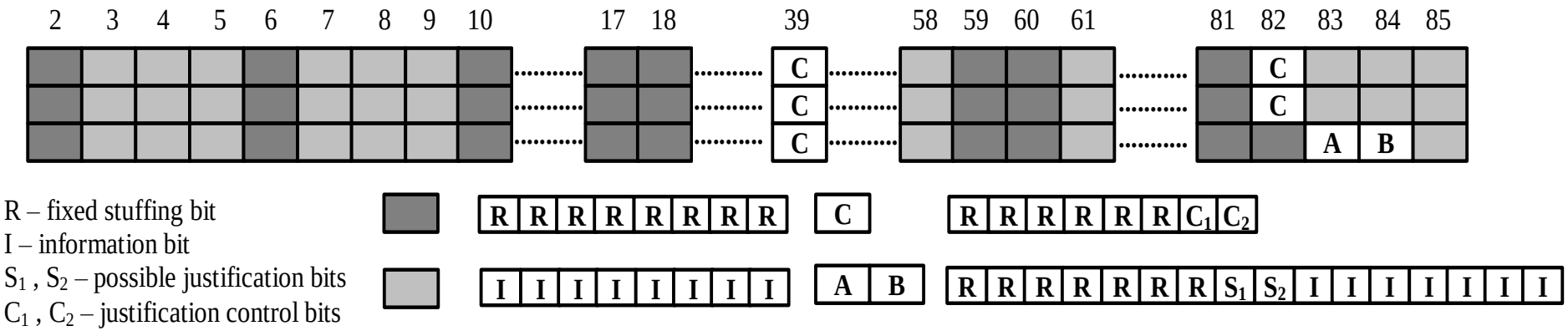

Mapping of the PDH flows into SDH containers

- Bit allocation in the C3 container in the asynchronous mapping of a PDH tributary having bit rate 34Mbps;

Bytes / partial frame	Information bits / partial frame	Stuffing bits / partial frame	Justification ctrl. bits / partial frame	Justification bits / partial frame	Overhead bits / partial frame
2016	1431	573	10	2	0
Bit / VC3	Info bits./VC3	Stuffing bits / VC3	Justification ctrl. bits / VC3	Justification bits / VC3	Overhead bits / VC3
2016×3= 6048	1431×3=4293	537×3=1719	10×3=30	2×3=6	0
Rate (kbps)	34344	13752	240	48	0
Total rate VC3 (without POH) = 48384 kbps					

Mapping of the PDH flows into SDH containers

- **Asynchronous mapping of a 2Mbps rate into a VC12 container;**
- It is used the following algorithm:
  - The mapping is realized into the TU12 multiframe, which includes 4 VC12 containers;
  - The group of the VC12 containers consists of 140 bytes, the repetition period of the group being 500μs;
    - the TU12 multiframe has a period of 500μs = 4 frames (containers) of 125μs.
  - In the multiframe are included 4 VC12 POH bytes, namely the bytes V_5, J_2, Z_6 and K_4.
  - The group of 4 VC12 containers includes 2 possible justification bits, S_1 şi S_2;
  - To each justification bits are associated 3 justification control bits, namely bits C_1 şi C_2;
    - identification of justification on any possible justification position is realized based on a majority decision applied to the justification control bits.

Mapping of the PDH flows into SDH containers

- Structure of the TU12 a) and TU11 b) multiframes used for asynchronous mapping of a plesiochronous tributary with rate 2Mbps or 1,544Mbps.

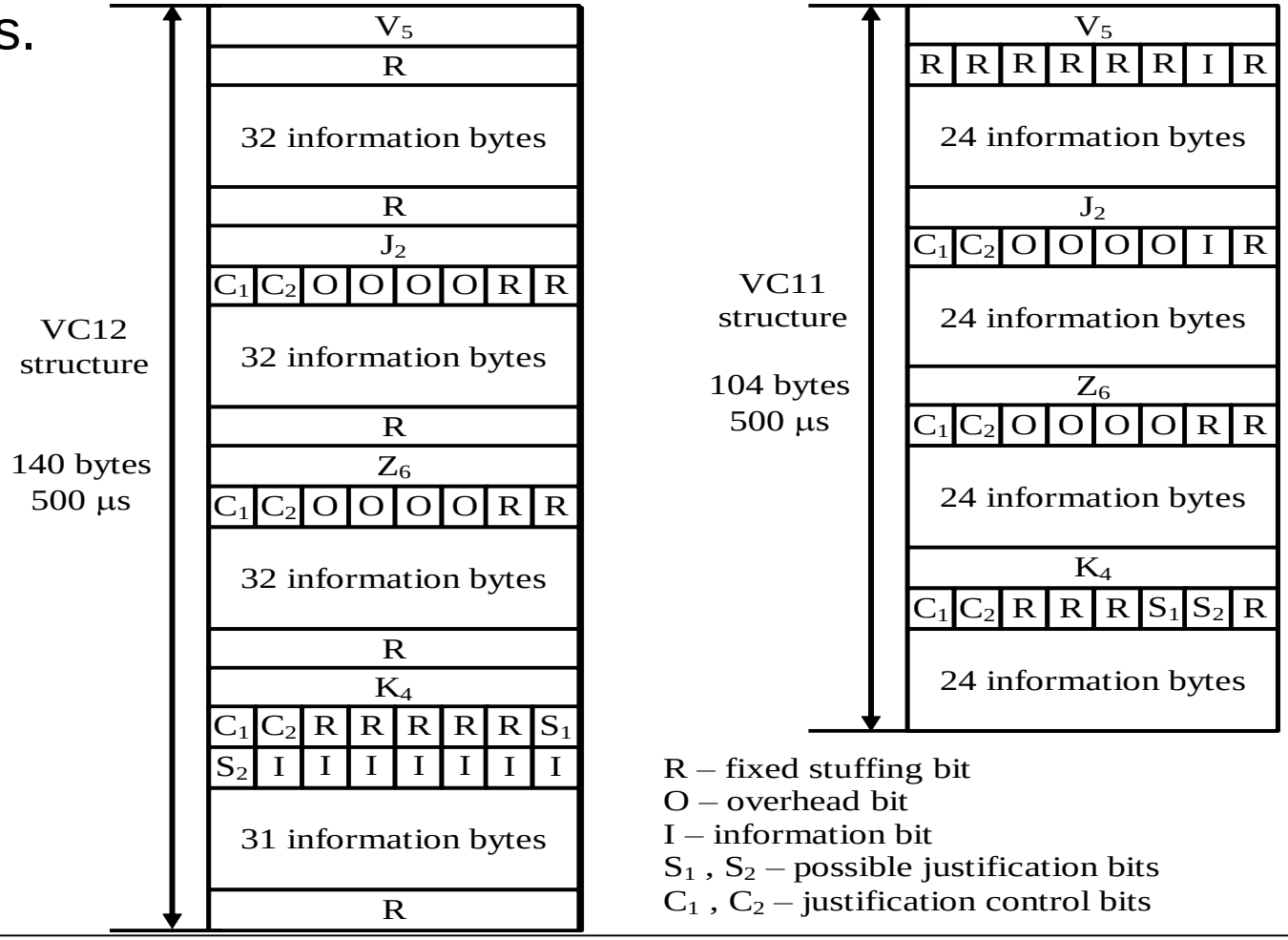

R – fixed stuffing bit
O – overhead bit
I – information bit
S_1 , S_2 – possible justification bits
C_1 , C_2 – justification control bits

Mapping of the PDH flows into SDH containers

- The mapping process ensures the following characteristics of the VC12 SDH flow:
  - total bit rate (of the payload area) VC12 = 2224kbps;
  - useful nominal rate f_s = 2048kbps;
    - it is obtained by transmitting one information and one justification bit in the 2 possible justification positions in a TU12 multiframe;
  - useful rate without the justification positions (the possible justification positions contain effectively justification bits) = 2046kbps $=f_s-10^{-3}$;
  - useful rate with justification positions (the possible justification positions contain information bits) = 2050kbps= f_s+10^{-3}.
- Bit allocation in the TU12 multiframe in the asynchronous mapping of a PDH tributary having bit rate 2Mbps;

Bytes / multiframe	Information bits / multiframe	Stuffing bits / multiframe	Justification ctrl. bits / multiframe	Justification bits / multiframe	Overhead bits / multiframe
1112	1016+7=1023	64+9=73	6	2	8
Rate (kbps)	2046	146	12	4	16
Total rate TU12 (VC12) multiframe (without POH) = 2224 kbps					

Mapping of the PDH flows into SDH containers

- **Asynchronous mapping of a 1.5Mbps rate into a VC11 container;**
- It is used the following algorithm:
  - The mapping is realized into the TU11 multiframe, which includes 4 VC11 containers;
  - The group of the VC11 containers consists of 104 bytes, the repetition period of the group being 500μs;
    - the TU11 multiframe has a period of 500μs = 4 frames (containers) of 125μs.
  - In the multiframe are included 4 VC11 POH bytes, namely the bytes V_5, J_2, Z_6 and K_4;
  - The group of 4 VC11 containers includes 2 possible justification bits, S_1 şi S_2;
  - To each justification bits are associated 3 justification control bits, namely bits C_1 şi C_2;
    - identification of justification on any possible justification position is realized based on a majority decision applied to the justification control bits.

Mapping of the PDH flows into SDH containers

- The mapping process ensures the following characteristics of the VC11 SDH flow:
  - total bit rate (of the payload area) VC11 = 1648kbps;
  - useful nominal rate f_s = 1544kbps;
    - it is obtained by transmitting one information and one justification bit in the 2 possible justification positions in a TU11 multiframe;
  - useful rate without the justification positions (the possible justification positions contain effectively justification bits) = 1542kbps $=f_s - 1{,}3\times 10^{-3}$;
  - useful rate with justification positions (the possible justification positions contain information bits) = 1546kbps= $f_s + 1{,}3\times 10^{-3}$.
- Bit allocation in the TU11 multiframe in the asynchronous mapping of a PDH tributary having bit rate 1.544Mbps;

Bytes / multiframe	Information bits / multiframe	Stuffing bits / multiframe	Justification ctrl. bits / multiframe	Justification bits / multiframe	Overhead bits / multiframe
1112	768+3=771	24+13=37	6	2	8
Rate (kbps)	1542	74	12	4	16
Total rate TU11 (VC11) multiframe (without POH) = 1648 kbps					

Mapping of the PDH flows into SDH containers

- **Asynchronous mapping of a 1.544Mbps rate into a VC12 container;**
- Can be realized by using the following algorithm:
  - It is generated a VC11 multiframe composed of 104 bytes;
  - The bytes are placed into a structure having 36 rows and 3 columns, structure from which is eliminated each 9th byte of the 3rd column;
    - the 4 missing positions are filled with the TU pointer.
  - The obtained structure represents 4 concatenated VC11 containers (9 rows $\times$ 3 columns) which forms a TU11 multiframe;
  - It is inserted a column with fixed stuffing bytes (fulfilling an even parity relation) between columns 2 and 3 of the structure;
    - as a result of this operation it is obtained a group of 4 concatenated VC12 containers (9 rows $\times$ 4 columns), which form a TU12 multiframe.
    - the VC12 containers generated in this way can not be distinguished in the network from normal VC12 containers, only at the receiver the original VC11 containers are rebuilt.

Mapping of the PDH flows into SDH containers

- Asynchronous mapping of a plesiochronous tributary having the 1.544 Mbps into a TU12 multiframe

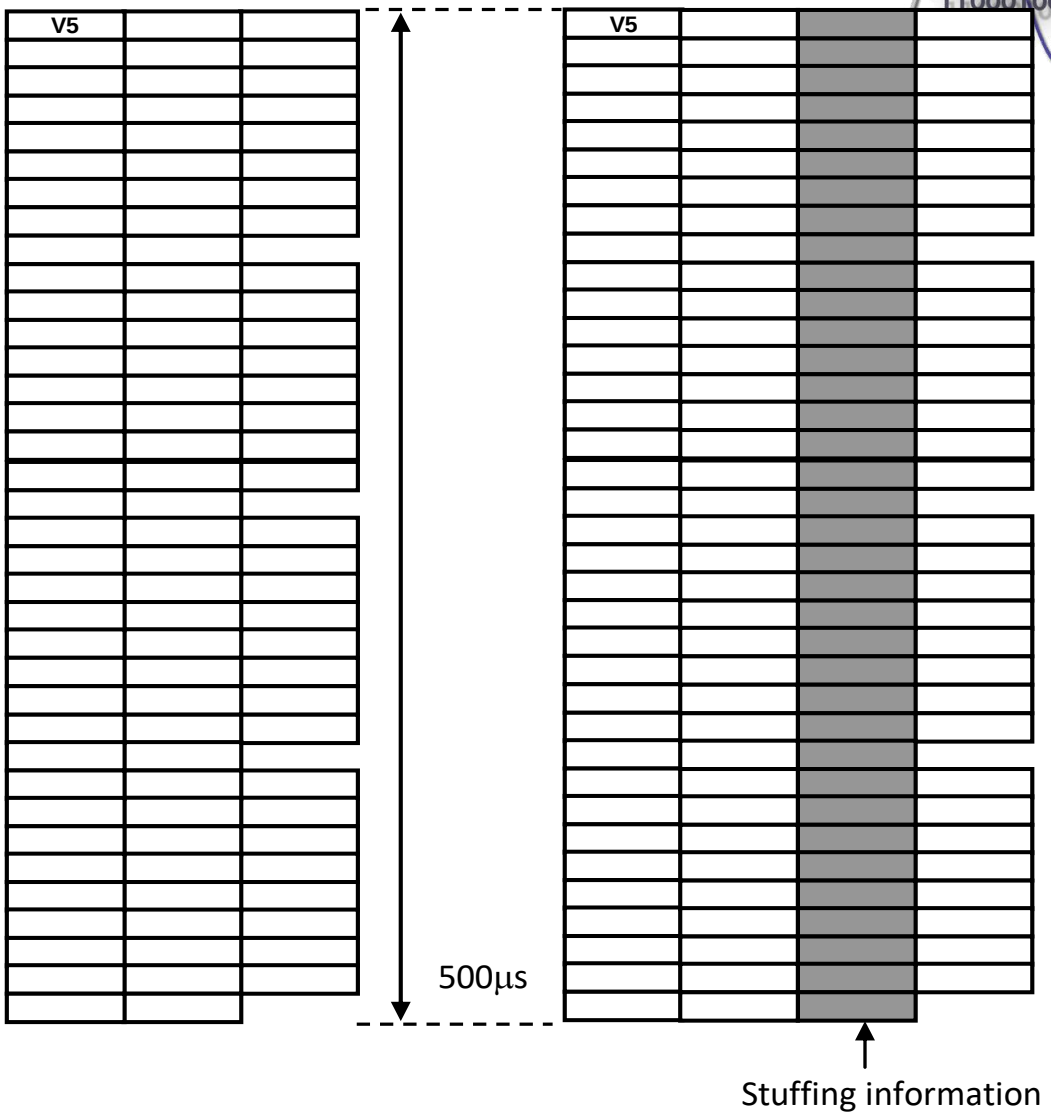

The SDH reference model

- Standardization of the units and equipments used to implement the synchronous digital hierarchies is necessary to ensure the interoperability of equipments from different manufacturers;
- This can be achieved by defining a reference model;
  - are specified the physical characteristics of the interfaces (bit rates, optical / electrical levels, impedances) and the content of each byte or even of each bit.
- The specifications refer to the following aspects:
  - frame structure (containers, tributary units, administrative units, transport frames);
  - frame identification;
  - data randomization;
  - data coding / decoding (line codes, error protection codes);
  - mapping procedures of the tributaries in the synchronous data structures;
  - use of the service channels;
  - signal control and monitoring;
  - network management;
  - network synchronization.

The SDH reference model

- The essential parts of the signal processing are defined as functions;
  - Each function is characterized by the effectively implemented function and by logical reference points used by the individual blocks to communicate;
    - the reference points are not test or measurement points and have no physical equivalent in many situations;
    - the external interfaces are physically defined, the specifications concerning these interfaces are identical with those of PDH systems interfaces.
- The SDH reference model is composed of 16 basic functions;
  - Each functional block has a clock reference point T and a management reference point S;
    - the T reference points communicate with blocks called SETS and the S reference points communicate with blocks called SEMF.

The SDH reference model

- The SDH equipments reference model;

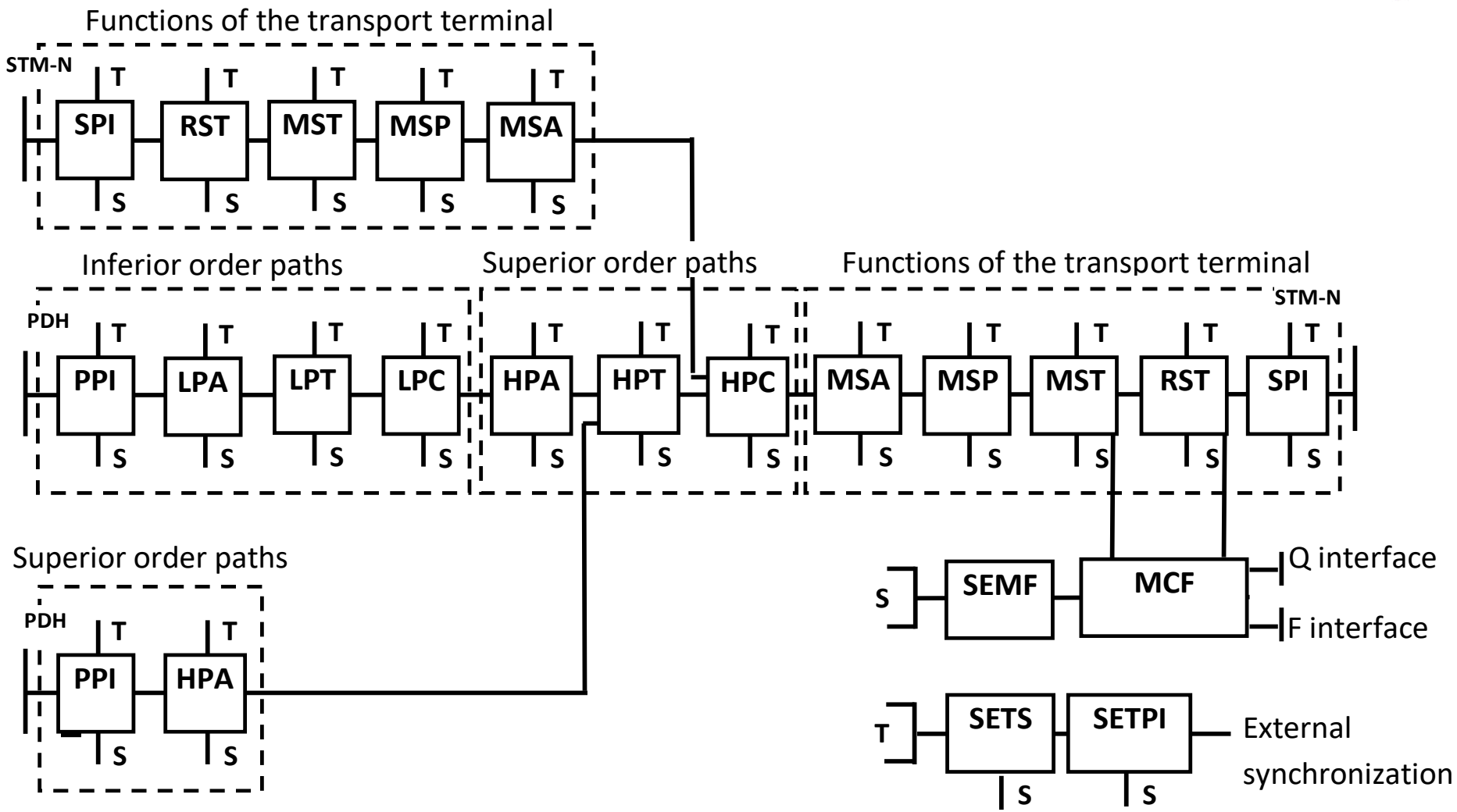

The SDH reference model

- The functions associated to the inferior order paths are:
  - PPI (PDH Physical Interface);
    - represents the interface for information transfer from / toward PDH; equipments;
    - tasks:
      - electrical isolation/ separation, overvoltage protection;
      - cable equalization, line coding;
      - clock recovery, input signal monitoring.
  - LPA (Lower Order Path Adaptation);
    - these functions define the mapping algorithms of the plesiochronous signals into virtual containers Cn (n=11, 12, 2, 3) and the necessary justification procedures.
  - LPT (Lower Order Path Termination);
    - this function generates and evaluates the Path Overhead of the virtual container.
  - LPC (Lower Order Path Connection);
    - this function allows the flexible positioning of the VC11, VC12, VC2 and VC3 containers in VC4 or of VC11, VC12, VC2 in VC3 according to a connection matrix.

The SDH reference model

- The functions associated to the superior order paths are:
  - HPA (Higher Order Path Adaptation);
    - it is assembled the content of the VC3 and VC4 containers;
    - are generated and adjusted the TU pointers which establish the phase relation between VCn (n=11, 12, 2, 3) şi VCm (m=3, 4);
  - HPT (Higher Order Path Termination);
    - it is generated and evaluated the POH of VCm (m = 3, 4).
  - HPC (Higher Order Path Connection) ;
    - this function allows the flexible positioning of the VCm (m=3, 4) containers in the STM-N frame.
- The functions associated to the transport terminal are:
  - MSA (Multiplex Section Adaptation);
    - are generated and adjusted the AU pointers;
    - are generated the AUG groups and the STM-N frames without SOH.

The SDH reference model

- MSP (Multiplex Section Protection);
  - ensures the possibility of switching on the protection paths in the case of defects on the line;
  - the MSP communication with the receiving station is realized with the K bytes from the SOH.
- MST (Multiplex Section Termination);
  - generates and evaluates MSOH.
- RST (Regenerator Section Termination);
  - generates and evaluates RSOH;
  - ensures the randomization of the STM-N signal;
  - ensures the frame alignment and the de-randomization at the reception.
- SPI (SDH Physical Interface);
  - realizes the conversion of the electrical STM-N signal into optical signal;
  - invers conversion and clock recovery at the reception side.
- SETS (Synchronous Equipment Timing Source);
  - ensures the clock signal necessary for the functioning of Network Elements (NE);
  - all the mentioned functions receive the clock signal through T interface of SETS.

The SDH reference model

- SETPI (Synchronous Equipment Timing Physical Interface);
  - represents the interface between the external synchronization source and SETS.
- SEMF (Synchronous Equipment Management Function);
  - the monitoring data (data concerning the performance monitoring and data concerning the functioning of the equipment's hardware) are converted in messages sent over the DCC (Data Communication Channel) from the header of the transport frames to a management and operation center;
  - in the opposite direction the messages from the management units are converted into signals specific to the hardware used;
  - the connections to the individual functional blocks are realized through the S logical reference points.
- MCF (Message Communication Function);
  - covers all the tasks related to the transport of the TMN messages to and from the management system.

The SDH protection switching

- The reliability and the maintenance of the transmission networks are two major aspects which have to be considered when the SDH multiplexers are installed;
  - The redundancy plays and important part and has to be ensured both at the level of the transmission channels and multiplexers;
    - if the transmission channel has interruptions, the data traffic has to be switched on an appropriate protection (backup) channel (protection switching);
    - if a multiplexer is out of order the system has to switch on available protection equipments (equipment protection).
- Some basic definitions related to protection switching:
  - single-ended operation;
    - unidirectional operation mode;
    - in the case of faults only on one transmission direction, the protection switching is activated only on that direction.

The SDH protection switching

- dual-ended operation;
  - bidirectional operation;
  - in the case of faults only on one transmission direction, the protection switching is activated on both directions.
- extra traffic;
  - an extra traffic is transmitted on the redundant channels and this traffic is interrupted when defects appear.
- normal traffic;
  - traffic transmitted on the redundant channels.
- revertime/non-revertime;
  - it is possible or not to switch back on the original channel after the defect is eliminated.

The SDH protection switching

- Some basic aspects related to protection switching:
  - Monitoring;
    - the traffic has to be monitored in order to detect immediately the faults/ defects;
  - Protection switching;
    - the traffic has to be switched by appropriate switches.
  - Protocol;
    - in protection switching a protocol is exchanged between multiplexers;
    - this protocol is controlling the protection switching process.
  - Control;
    - the protection switching has to be controlled in an appropriate way;
    - the detected faults/ defects has to be signaled by alarms;
    - due to maintenance reasons the switching on backup channels has to be possible even if faults/ defects are not present.

The SDH protection switching

- Protection switching procedures;

Procedure name	Operation type	Transmission protocol	Extra traffic
MS 1+1 protection	Single-ended/ dual-ended revertime/ non-revertime	Bytes K_1/K_2	Not possible
MS 1+n protection	Single-ended/ dual-ended revertime/ non-revertime	Bytes K_1/K_2	Possible
Shared MS ring protection	Dual-ended revertime/ non-revertime	Bytes K_1/K_2	Possible
Dedicated MS ring protection	Single-ended/ dual-ended revertime/ non-revertime	Bytes K_1/K_2	Possible
Path/ subnetwork protection	Single-ended/ dual-ended revertime/ non-revertime	Not necessary	Not possible
	Dual-ended revertime/ non-revertime	Bytes K_3/K_4	Not possible

- MS 1+1 protection (MS – Multiplex Section);
  - The traffic is doubled and sent on two lines;
    - the receiver selects one of the lines.
  - Extra traffic is not possible in this case.

The SDH protection switching

- MS 1+1 protection procedure;

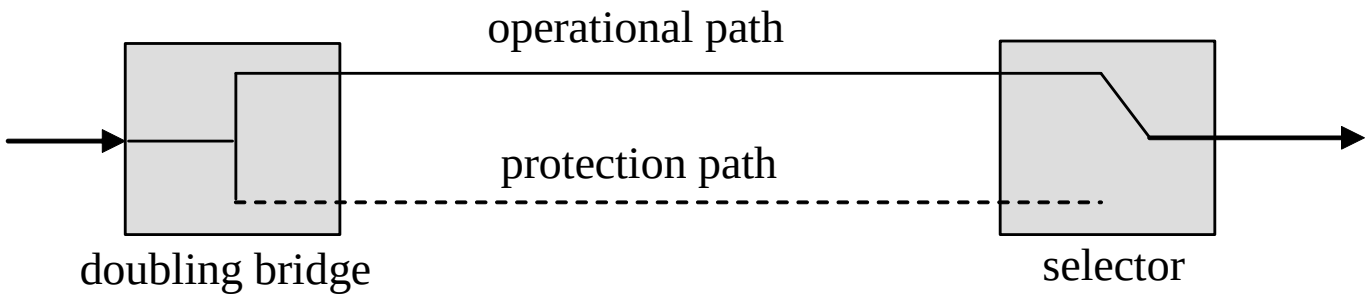

- MS 1:n protection;
  - A number of n operational channels (n=1,...,14, usually) share the same protection section;
  - The protection switches from the transmission and reception have to operate in the same way, but in opposite order;
  - In this case it is possible the transmission of extra traffic.

The SDH protection switching

- MS 1:n protection procedure;

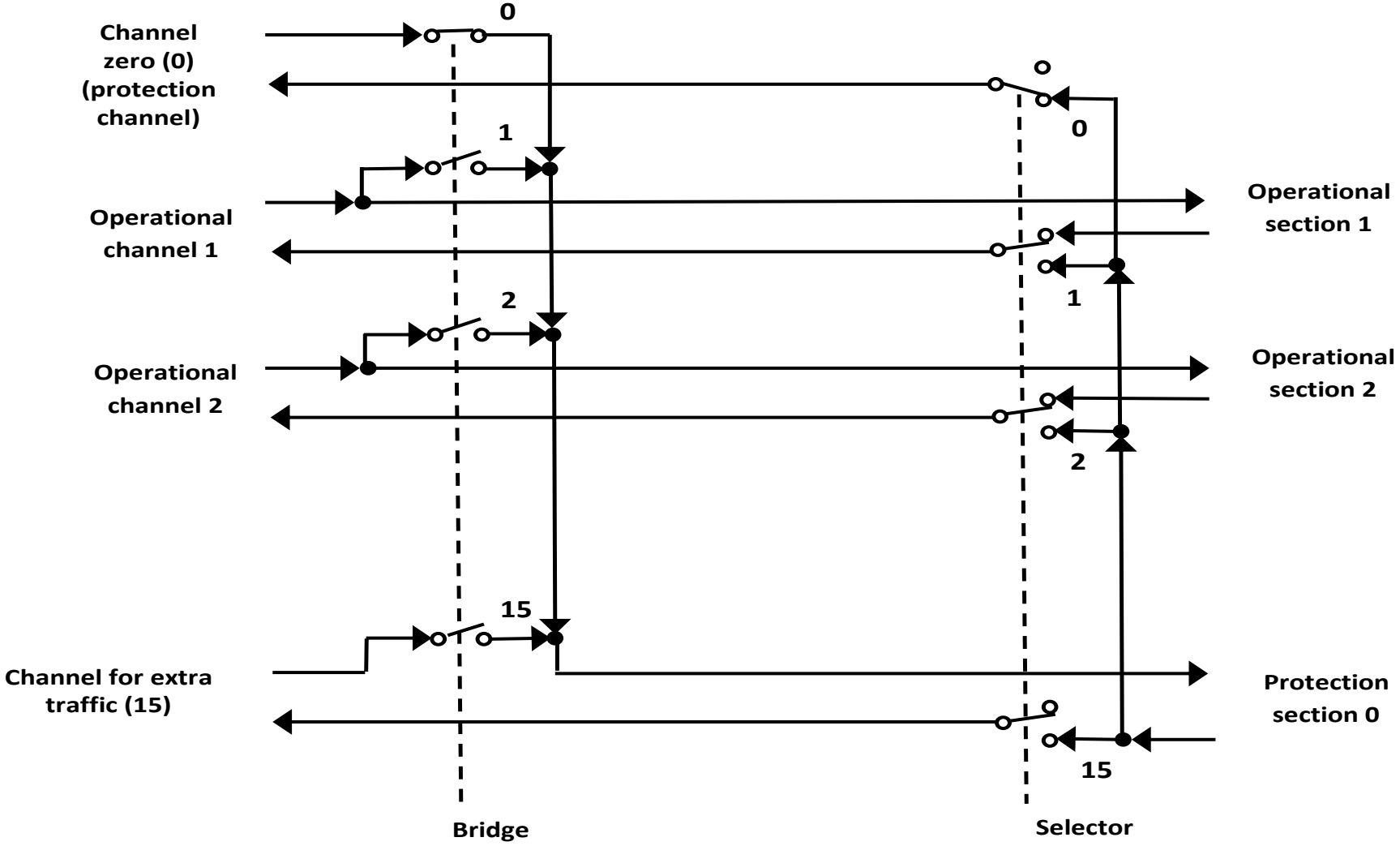

The SDH protection switching

- The shared MS protection ring;
  - Can be implemented a topology composed of two or four fibers;
  - The connections are established in both directions, using the same ring segment;
    - the advantage consists in increased transmission capacity.
  - The protection ring can be used for extra traffic and in the case of faults the backup multiplexers switch on normal traffic;
  - In the case of a ring composed of four fibers there are two levels of protection switching:
    - in the first phase the system tries to protect each section by an MS 1+1 protection;
    - if the fault can not be eliminated in this way new loops are formed using the second double ring.

The SDH protection switching

- MS shared ring protection switching procedure;

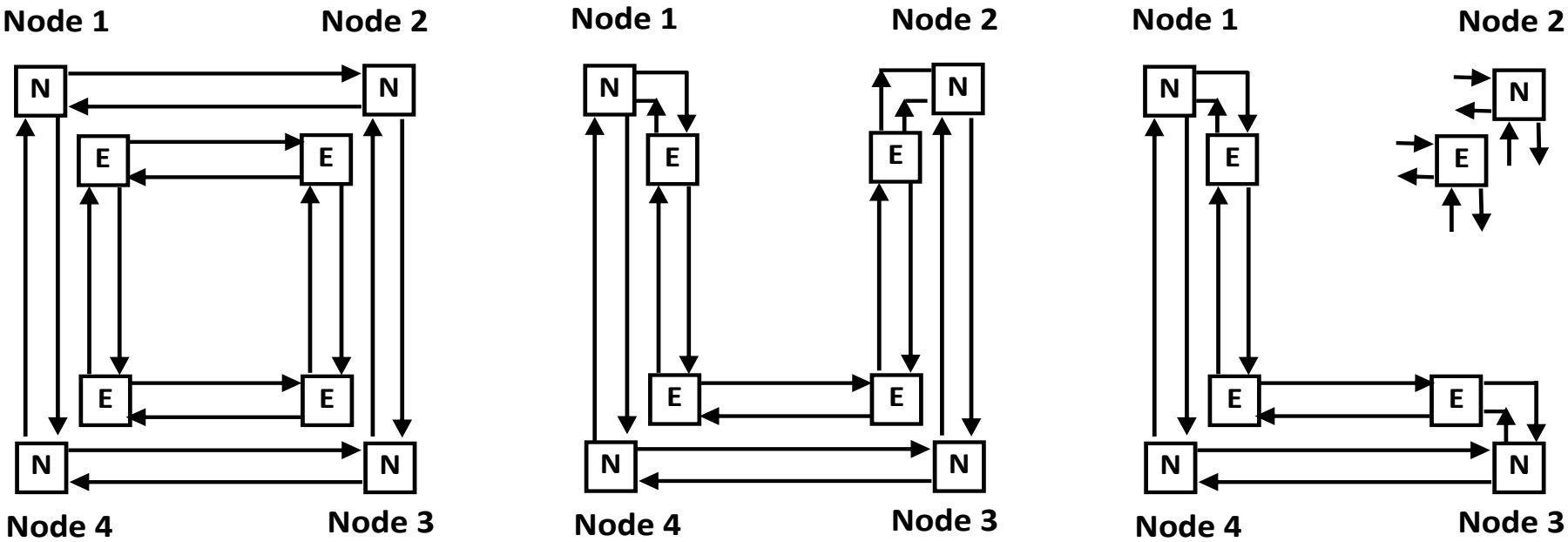

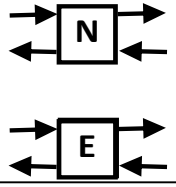

Add/Drop traffic for normal traffic

Add/Drop switch for extra traffic

The SDH protection switching

- Dedicated MS protection ring;
  - Consists of two fibers:
    - one fiber is used for normal traffic;
    - the other fiber remains free or can be used for supplementary traffic;
  - Each connection occupies only one single ring;
  - In the case of a fault the adjacent multiplexers switch the normal traffic on the protection ring;
    - the switching process is only dual-ended in this case.

The SDH protection switching

- Dedicated MS ring protection procedure;

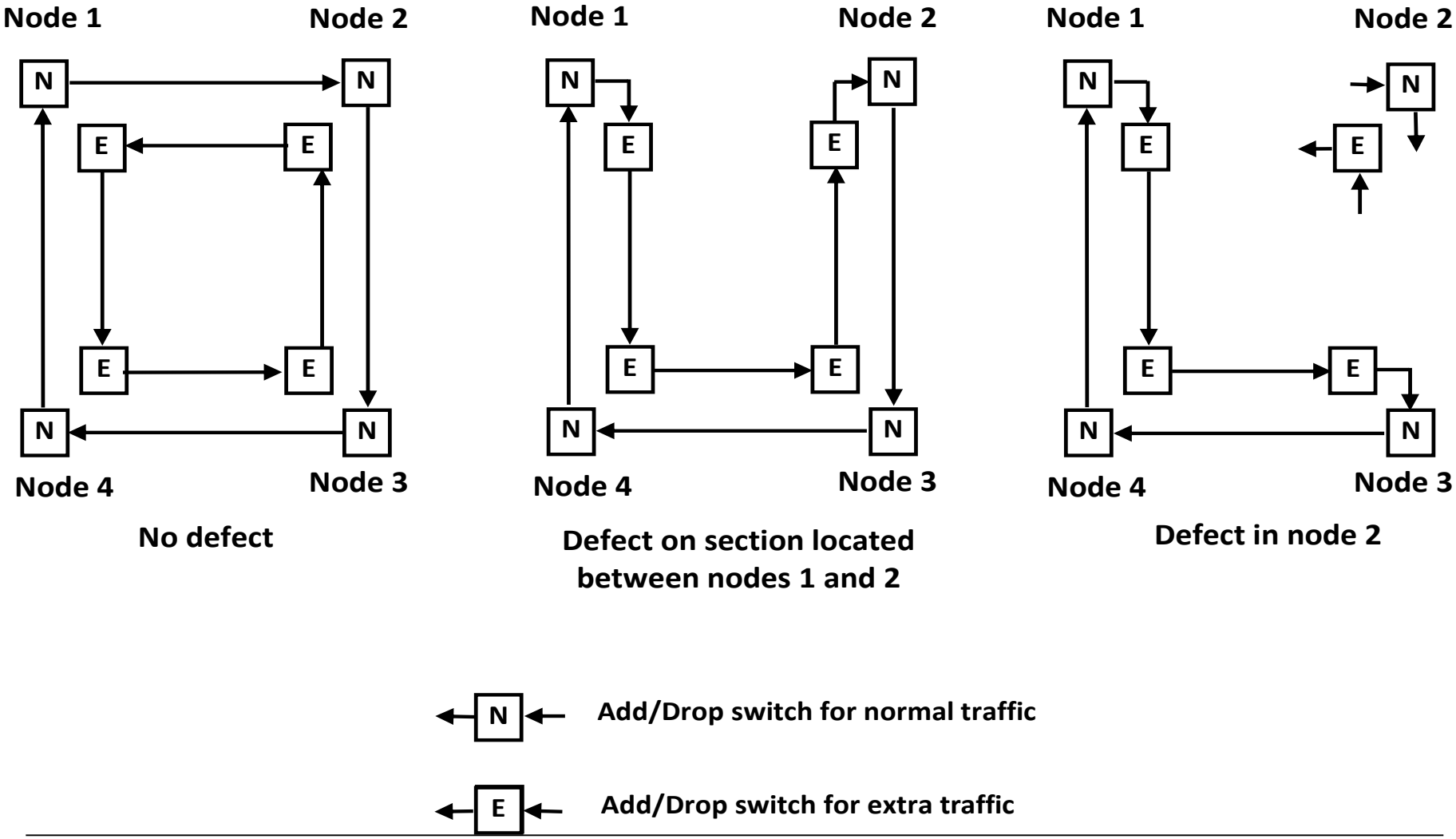

The SDH protection switching

- The path/ subnetwork protection protects the useful data by doubling them and assembling them in virtual containers sent through different interfaces and transmission paths;
  - The receiver monitors both containers and selects one of them based on criteria related to the quality of the transmission and of the services provided;
- There are available the following variants of this protection:
  - Path protection;
    - the useful data are doubled at the virtual container level and are sent two different containers on two separate paths.
  - Subnetwork protection;
    - it is generated only a single virtual container, which is sent over two separate paths;
    - usually no distinction is made between the two protection variants.

The SDH protection switching

- Path protection and subnetwork protection procedures;

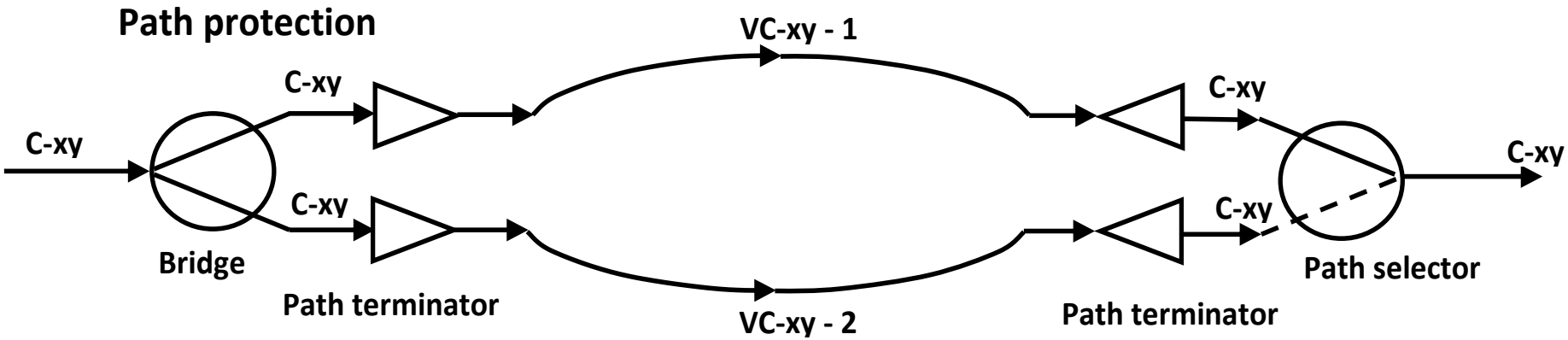

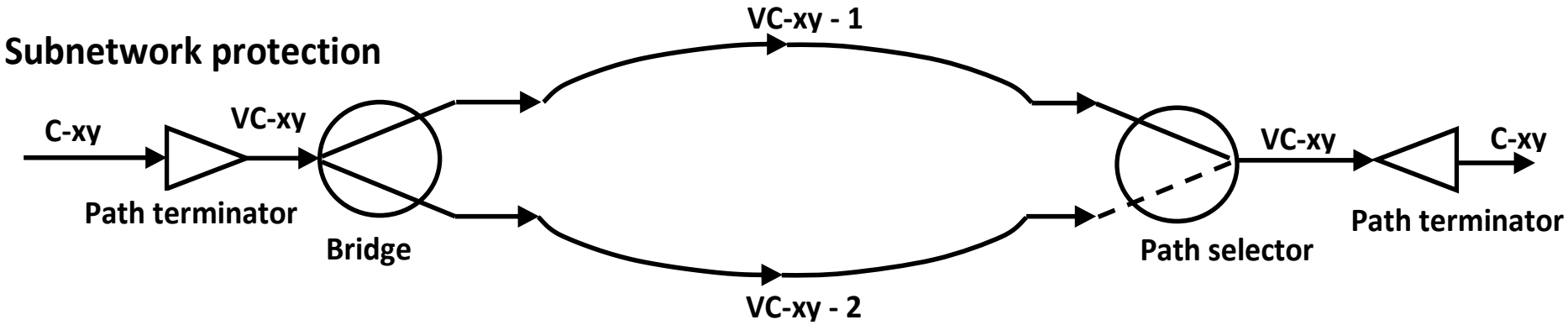

The SDH protection switching

- Advantages of the path / subnetwork protection:
  - Low technical complexity;
  - The possibility to use it in any network topology;
  - Flexibility concerning the selection of the protection path.
- Disadvantages of the path / subnetwork protection:
  - High technical complexity;
    - a large number of switches are necessary;
  - Extra traffic is not possible;
  - The traffic which has to be protected is always transmitted with redundancy.

The SDH protection switching

- The control of the protection switching is realized by exchanging a protocol between the multiplexers;
  - There are necessary dedicated channels for transmission of these protocols;
    - the K_1 and K_2 bytes of the SOH are used for protocols which ensure the MS protections;
    - for path/ subnetwork protection is necessary a separate protocol for each virtual container;
    - this protocol can be transmitted on the K_3 and K_4 bytes of the POH.