Course 2-3
Fundamental notions of digital telephony. The primary PCM multiplex.

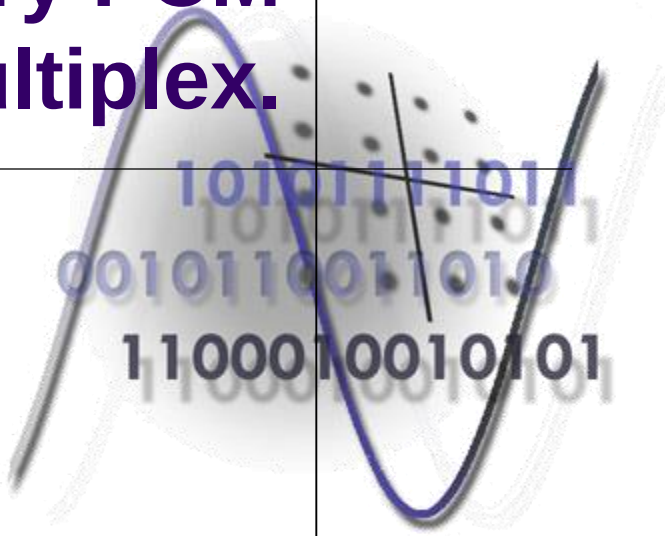

Zsolt Polgar

Communications Department
Faculty of Electronics and Telecommunications,
Technical University of Cluj-Napoca

Cotent of the course

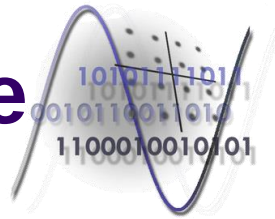

- Fundamental notions of digital telephony;
  - PCM modulation;
  - Delta modulation;
- The primary PCM multiplex;
  - The primary E1 multiplex;
  - The primary T1 multiplex;
  - Frame synchronization;
  - Alarms;
  - Line interfaces;
- Data terminal – multiplexer interfaces;

A/D conversion of the voice signal

- The transmission technique used in digital telephone networks:
  - PCM (Pulse Coded Modulation);
    - represents a non-uniform A/D conversion with 8 bits/sample followed by the transmission on the channel of the bits associated to the codewords;
  - The bit rate obtained for a telephone channel is 64kbps;
  - More advanced voice coding techniques can ensure a significant reduction of the necessary bit rate;
    - ADPCM (Adaptive Differential PCM) and parametric coding techniques – take into account the characteristics of the voice signal;
      - it can be used only for coding of voice signal – it is not possible the data transmission by using a modem in a network that uses such coding;
      - voice coding techniques:

ITU-T standard	Coding method	Coded signal bit rate (kbps)
G.711	PCM	64
G.721	ADPCM	32, 16, 24, 40
G.728	LD-CELP	16
G.729	CS-ACELP	8
G.723.1	Multirate CELP	6.3, 5.3

A/D conversion of the voice signal

- Processing required by PCM:
  - Sampling;
  - Quantization;
  - Coding;
- The sampling theorem – basic relations, the aliasing phenomenon:

$$x_s(t) = x(t) \cdot \delta_{T_s}(t) = x(t) \cdot \sum_{n=-\infty}^{\infty} \delta(t - nT_s) = \sum_{n=-\infty}^{\infty} x(nT_s) \cdot \delta(t - nT_s)$$

$$X_s(\omega) = \frac{1}{T_s} \cdot \sum_{k=-\infty}^{\infty} X(\omega - k \cdot \omega_s)$$

- Shannon's theorem:
  - Any signal x(t) with finite input domain spectral density function X(ω) (X(ω)=0, $\forall |\omega| > \omega_M$) is completely defined by its samples {x(nT)}, if $T=(\pi/\omega_M)$;

A/D conversion of the voice signal

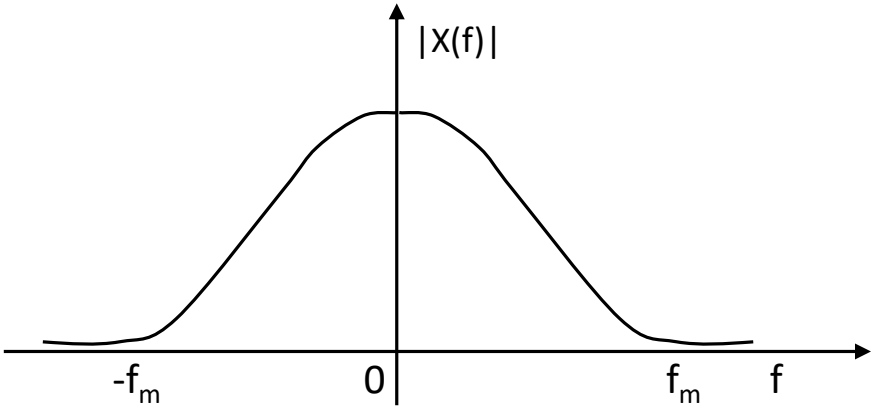

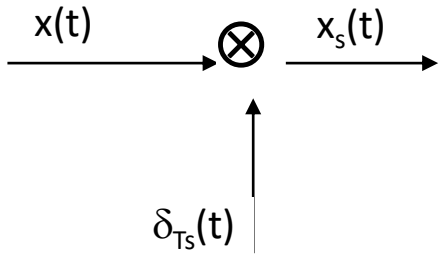

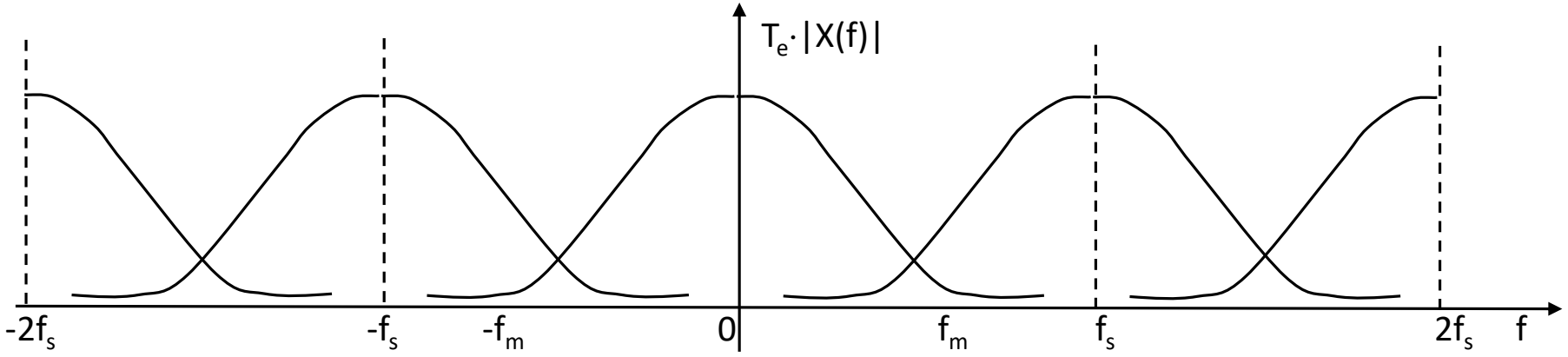

Spectral properties of the sampled signals and the aliasing effect.

A/D conversion of the voice signal

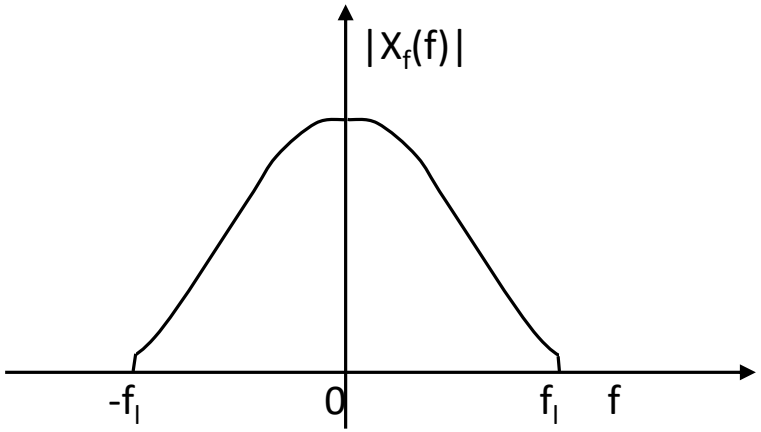

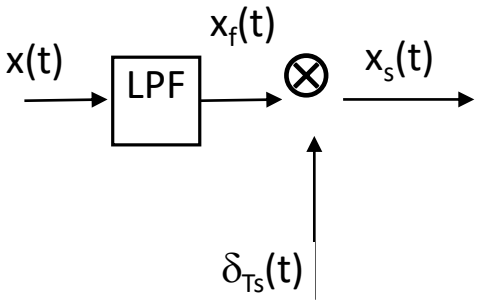

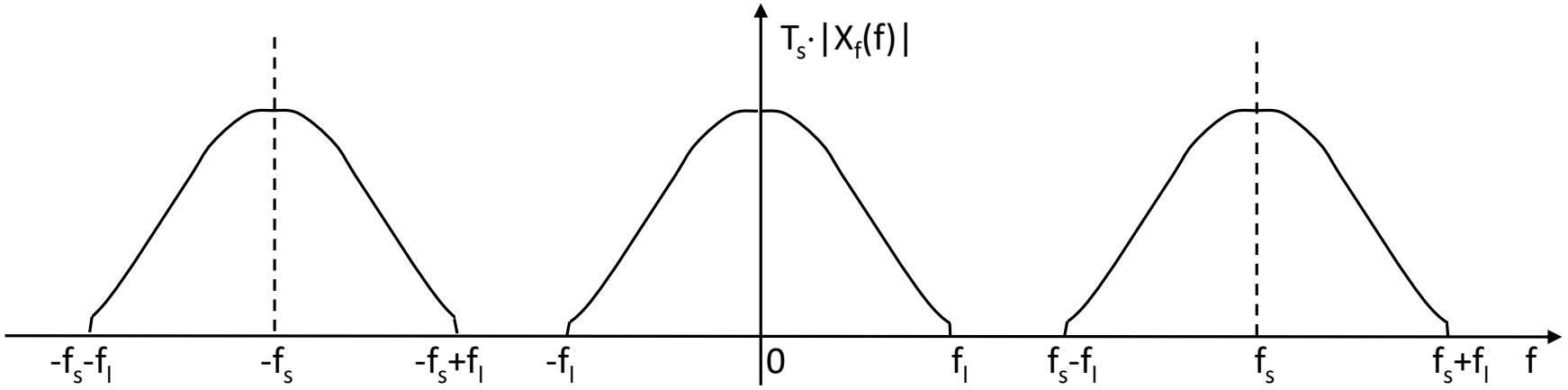

Spectral properties of the sampled signals and the suppression of the aliasing effect.

A/D conversion of the voice signal

- Reconstruction of the sampled signals using LP filtering;
  - basic relation for ideal filtering:

$$H(\omega)=\begin{cases} T_s=\dfrac{1}{2f_M}\,,\ \forall|\omega|<\omega_M \\ 0\,,\ \forall|\omega|>\omega_M \end{cases} \quad ; \quad h(t)=\sin c(\omega_M t)$$

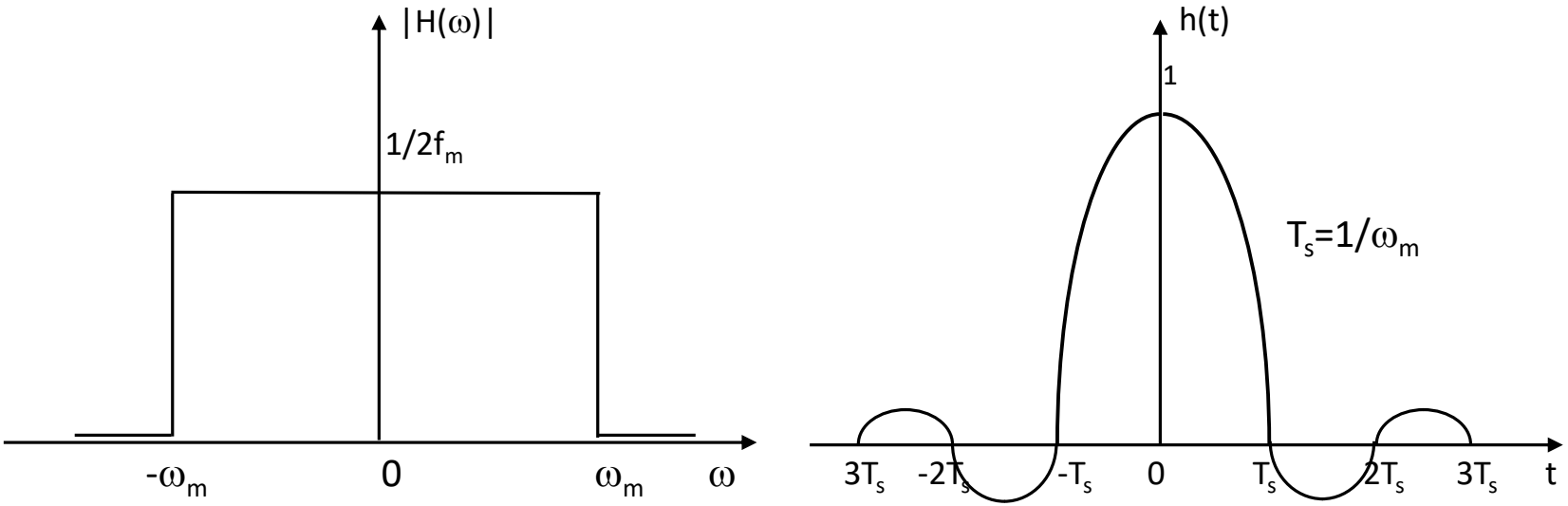

Frequency characteristic and impulse response of an ideal reconstruction filter.

A/D conversion of the voice signal

- The uniform and non-uniform quantization techniques;

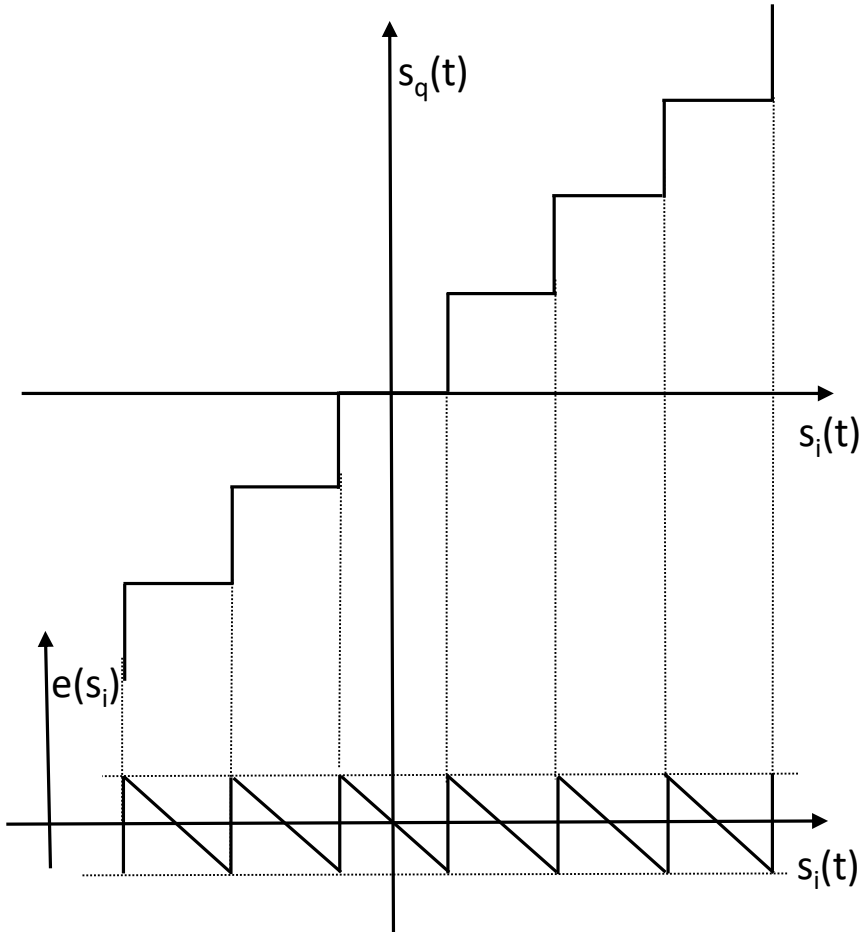

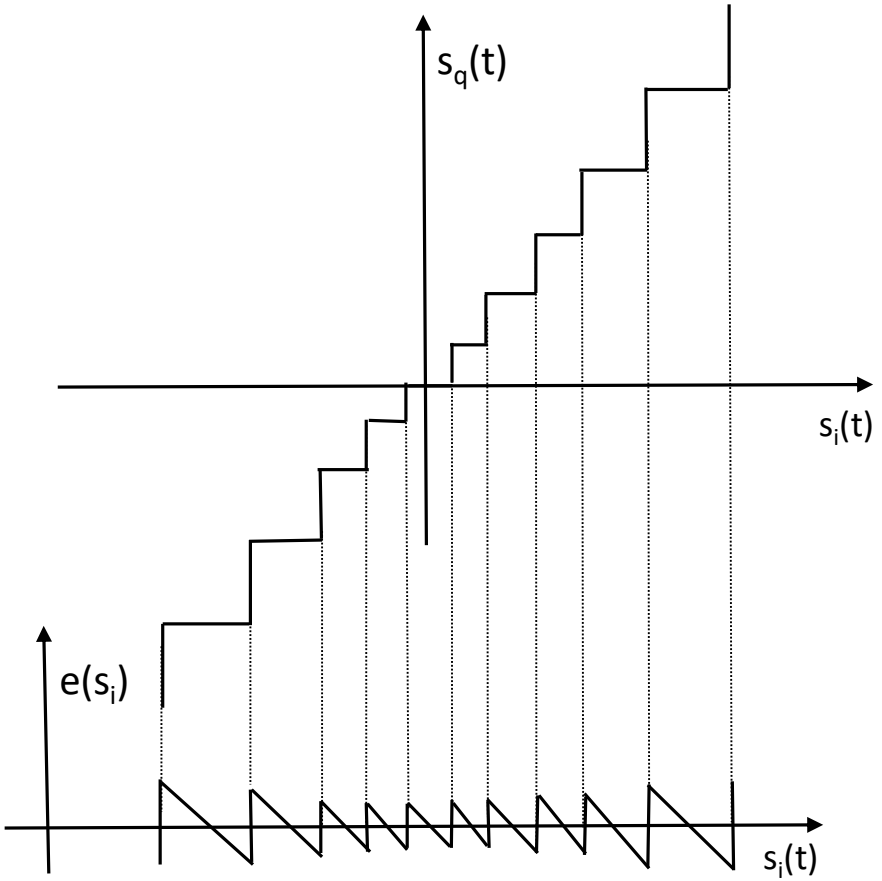

Quantization techniques: a) uniform quantization b) non-uniform quantization

A/D conversion of the voice signal

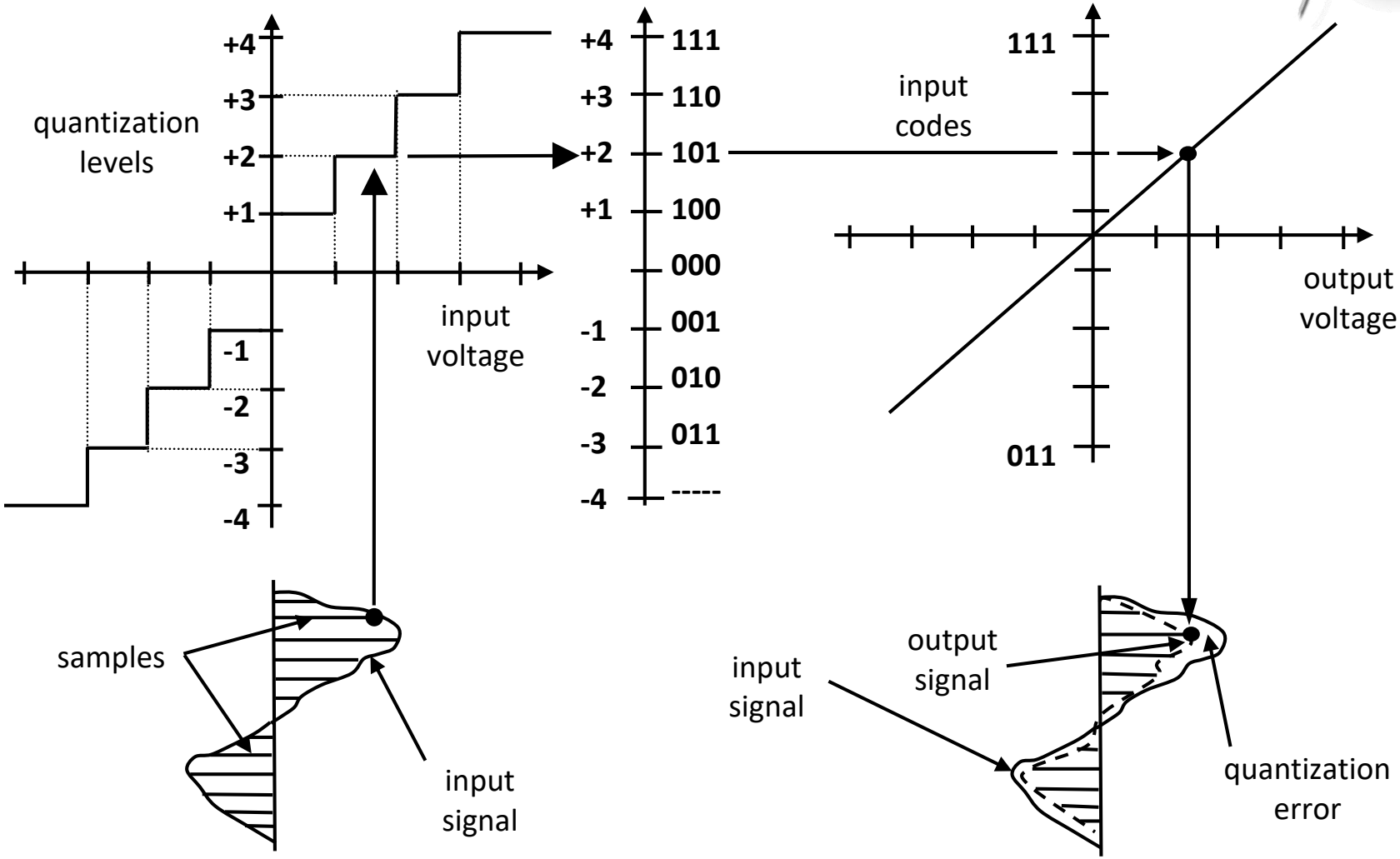

Explanation of PCM coding and decoding process in the case of uniform quantization with 3 bits/sample

A/D conversion of the voice signal

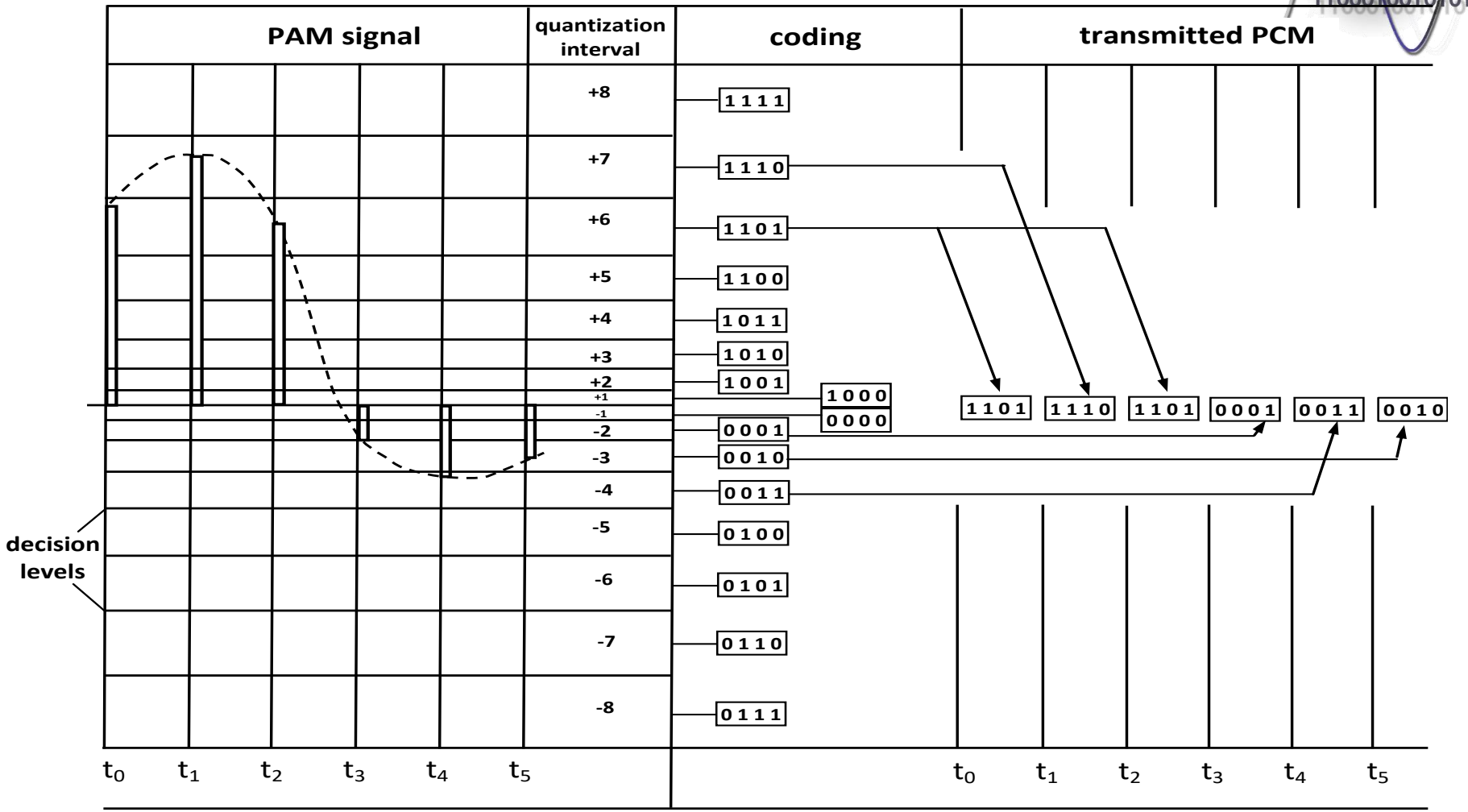

Explanation of the PCM coding and decoding process in the case of non-uniform quantization with 3bits/sample

A/D conversion of the voice signal

- The quantization signal to noise ratio;
  - The quantization error is considered a noise signal;
  - A general expression of the mean quantization noise power is given by:

$$P_q = \sum_{i=1}^{N} p_i \cdot P_{qi}$$

    - N is the number of quantization intervals;
    - p_i is the probability that the transmitted signal is located in the ith interval;
    - P_{qi} is the power of the quantization noise in interval i.
  - If the dynamic range of the transmitted signal is 2V and the width of the quantization intervals are Δ_i, then the p_i probabilities are given by: $p_i = \frac{\Delta_i}{2V}$
  - Considering the uniform distribution of the quantization error inside a quantization interval, the power of the quantization noise in interval i is given by:

$$P_{qi} = \int_{-\frac{\Delta_i}{2}}^{+\frac{\Delta_i}{2}} \frac{1}{\Delta_i} \cdot e_r^2 \cdot de_r = \frac{\Delta_i^2}{12}$$

A/D conversion of the voice signal

- The signal/quantization noise ratio, SNR_q, is defined as: $SNR_q = \frac{P_s}{P_q}$

- Implementation of the non-uniform quantization:
  - Usage of converters with non-uniform quantization;
  - Usage of converters with uniform quantization combined with compression / expansion circuits;
    - the compression/expansion characteristics could be continuous or segmented;

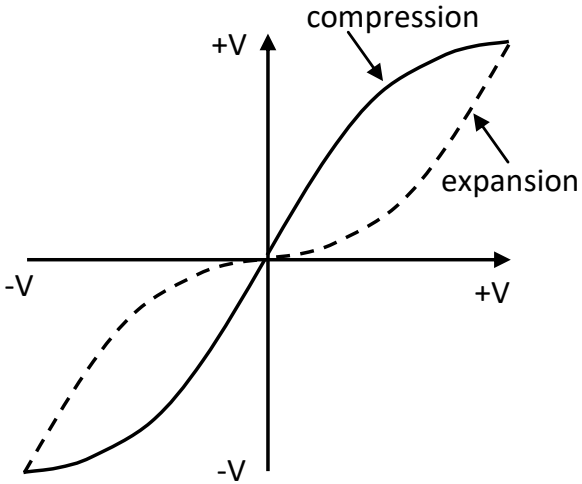

a) Continuous characteristic

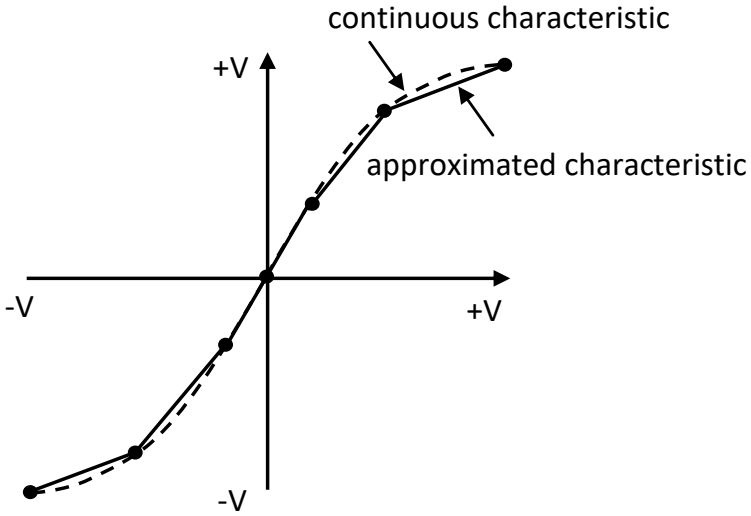

b) Segmented characteristic

Continuous and segmented compressed characteristics

A/D conversion of the voice signal

- The implementation of the non-uniform quantization can be achieved by using analogue or digital compression;
  - Processing chain of the PCM coding-decoding for analogue compression;

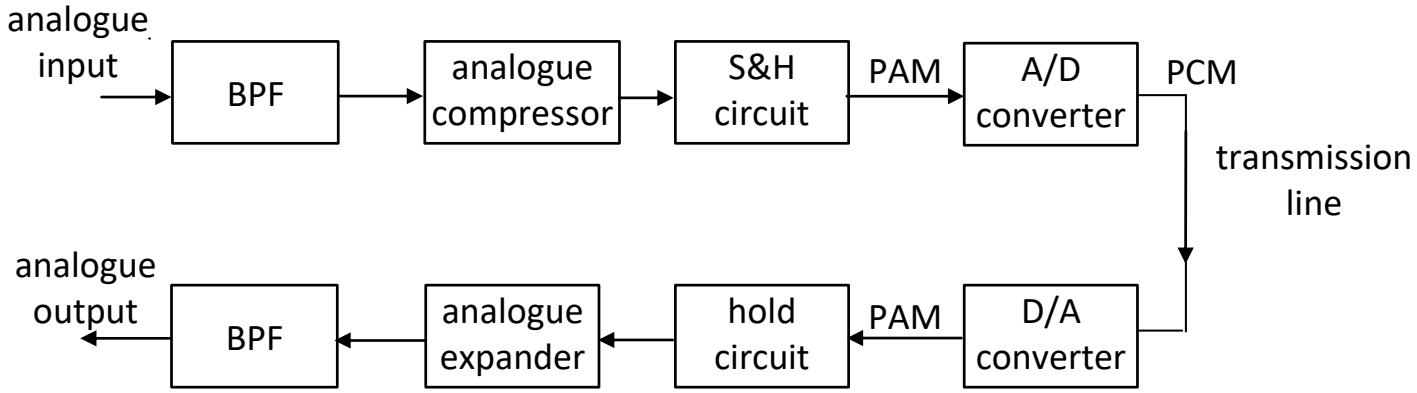

  - Processing chain of the PCM coding-decoding for digital compression;

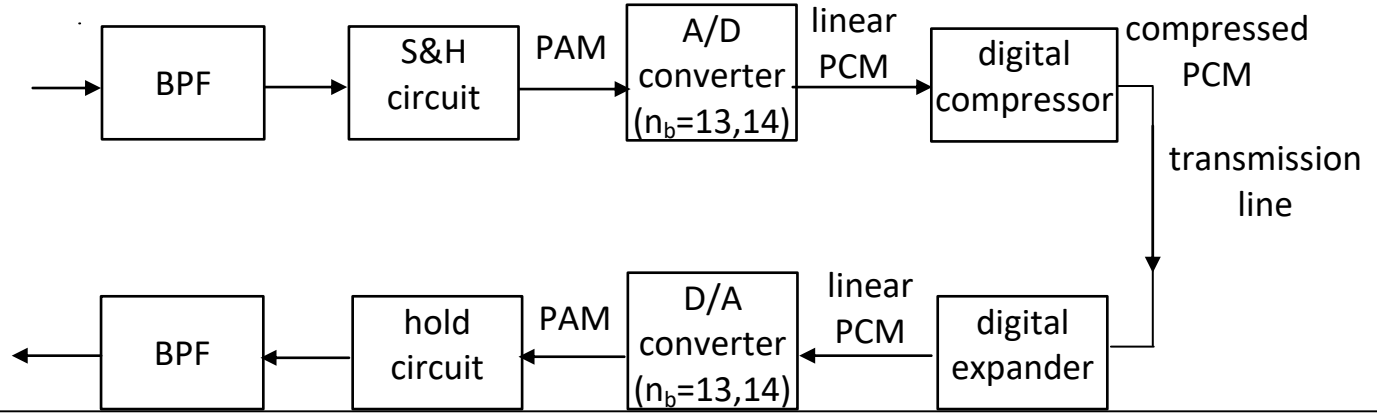

A/D conversion of the voice signal

- Compression and expansion laws used in digital telephone networks:
  - the μ compression law is described by the following relation:

$$y = \frac{\operatorname{sgn}(x)\cdot \ln(1+\mu\cdot|x|)}{\ln(1+\mu)} \quad ; \quad -1 \le x \le 1 \qquad x = \operatorname{sgn}(y)\cdot\frac{1}{\mu}\cdot\left[(1+\mu)^{|y|}-1\right] \quad ; \quad -1 \le y \le 1$$

  - the A compresion law is described by the following relation for input values x≥0:

$$y = \frac{1+\ln(Ax)}{1+\ln(A)};\ \text{for}\ \frac{1}{A} < x < 1 \qquad x = \frac{y\cdot(1+\ln(A))}{A} \quad ; \quad 0 \le y \le \frac{1}{1+\ln A}$$

$$y = \frac{Ax}{1+\ln(A)};\ \text{for}\ 0 < x < \frac{1}{A} \qquad x = \frac{\exp(y\cdot(1+\ln(A))-1)}{A} \quad ; \quad \frac{1}{1+\ln A} \le y \le 1$$

$$A = 87.6$$

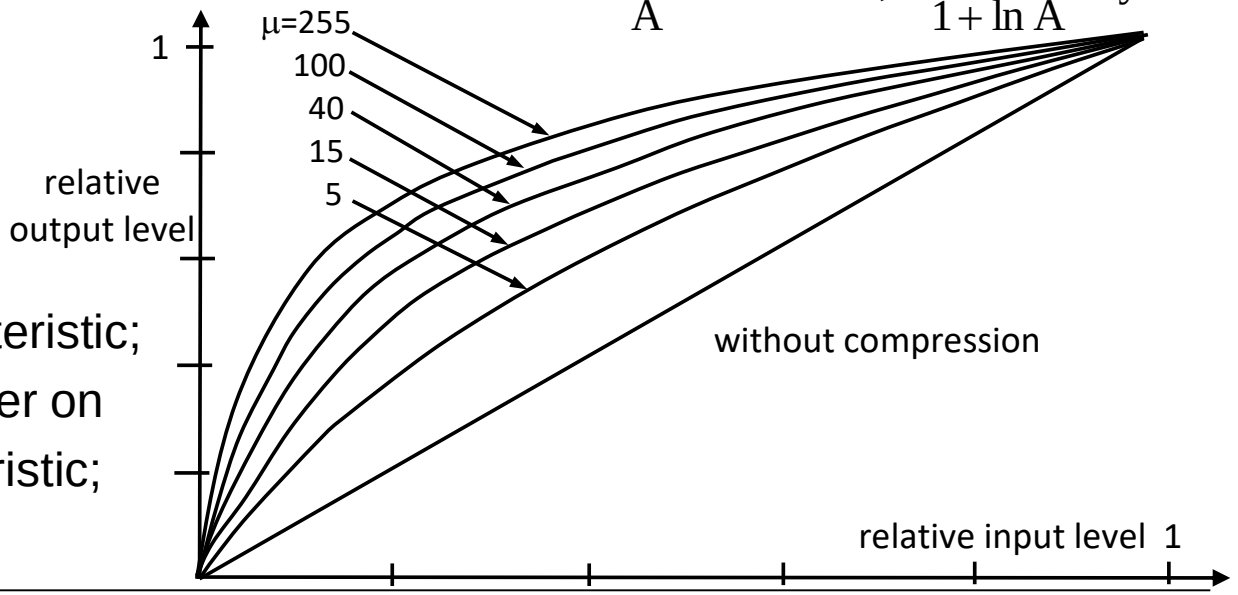

- The μ compression characteristic;
- The influence of μ parameter on the compression characteristic;

A/D conversion of the voice signal

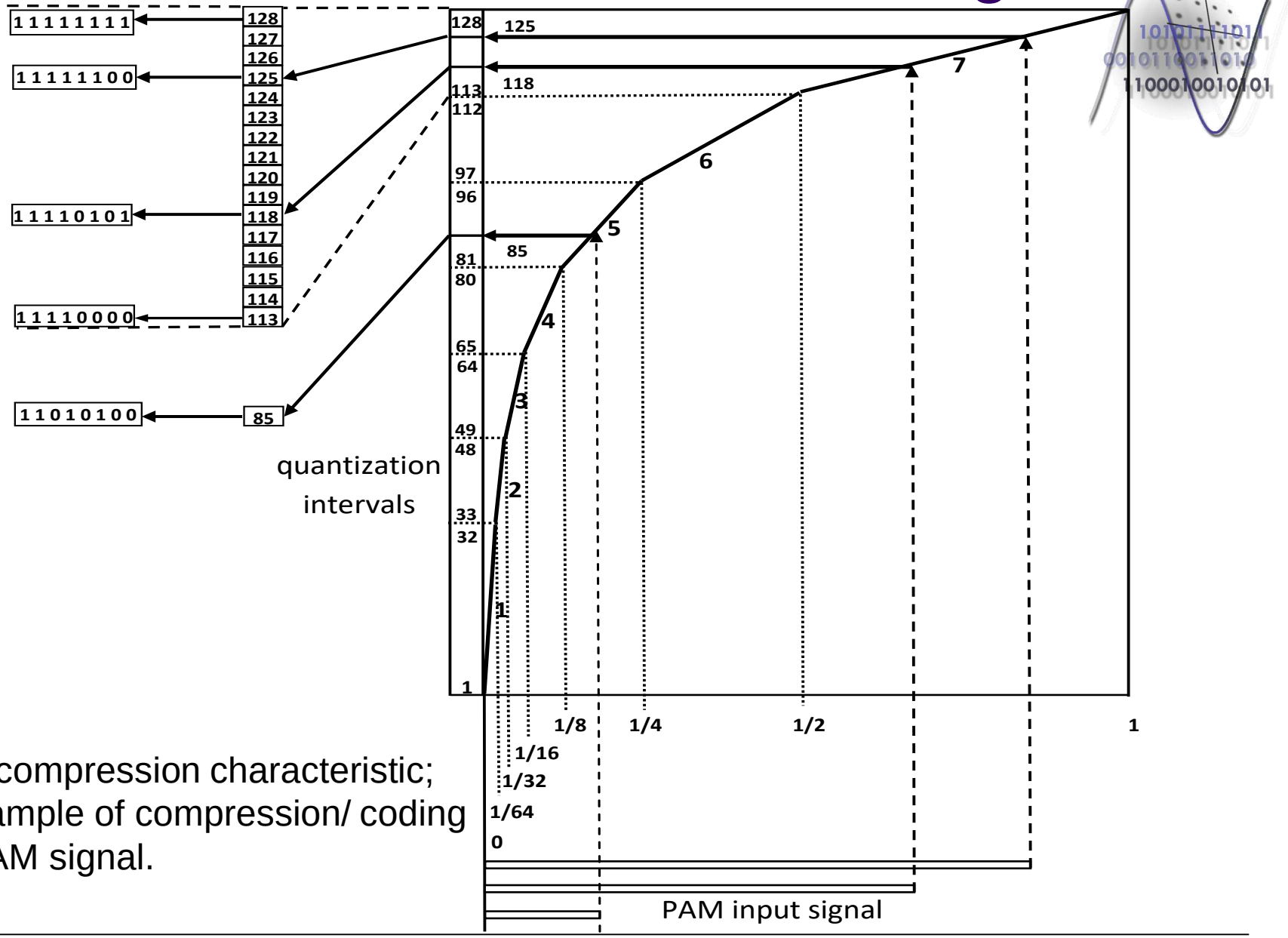

- The A compression characteristic;
- An example of compression/ coding of a PAM signal.

DPCM modulation

- Disadvantage of the PCM modulation:
  - Large transmission bandwidth – low spectral efficiency;
  - The decrease of transmission bandwidth can be achieved by exploiting the correlation between the samples of the transmitted signal;
    - the use of the correlation between the samples of the signal represents the basic idea of the diferential PCM modulation;
- DPCM modulation:
  - The next sample is predicted based on the previous samples and it is coded (quantized) only the difference between the current sample, $x(kT_e)=x_k$, and the predicted sample, $\hat{x}_k\,(kT_s)=\hat{x}_k$;
  - If the diffrence signal has a smaller dynamic range than that of the source signal the quantization can be performed on a smaller number of bits;
    - the transmission rate can be reduced;

$$d_k = x_k - x_{k-1}$$

$$\overline{d}_k^2 = \overline{\left(x_k - x_{k-1}\right)^2} = \overline{x_k^2 + x_{k-1}^2 - 2x_k \cdot x_{k-1}} = 2\overline{x_k^2} - 2\overline{x_k \cdot x_{k-1}}$$

DPCM modulation

- It is defined a correlation coefficient (or correlation factor) C:

$$C = \frac{\overline{x_k \cdot x_{k-1}}}{\overline{x_k^2}} \Rightarrow \overline{d_k^2} = 2\overline{x_k^2} \cdot (1 - C)$$

$$\begin{cases} 1.\ if\ C > 0.5 \Rightarrow \overline{d_k^2} < \overline{x_k^2} \\ 2.\ if\ C < 0.5 \Rightarrow \overline{d_k^2} > \overline{x_k^2} \end{cases}$$

- If C<0.5 it does not worth to use DPCM;
  - the samples are de-correlated and the bit rate decrease is small;
- If C>0.5 it does worth to use DPCM;
  - the samples are correlated and the bit rate decrease is significant;
- Disadvantages of DPCM relatively to PCM:
  - it is more complex – it is required a prediction circuit of the current sample based on the previous ones;
  - it can not be used with the same parameters for voice and data;
  - if there are errors on the line there are affected several samples.

DPCM modulation

- Block schematic of the DPCM coder;
  - The predicticion circuit works with N samples;

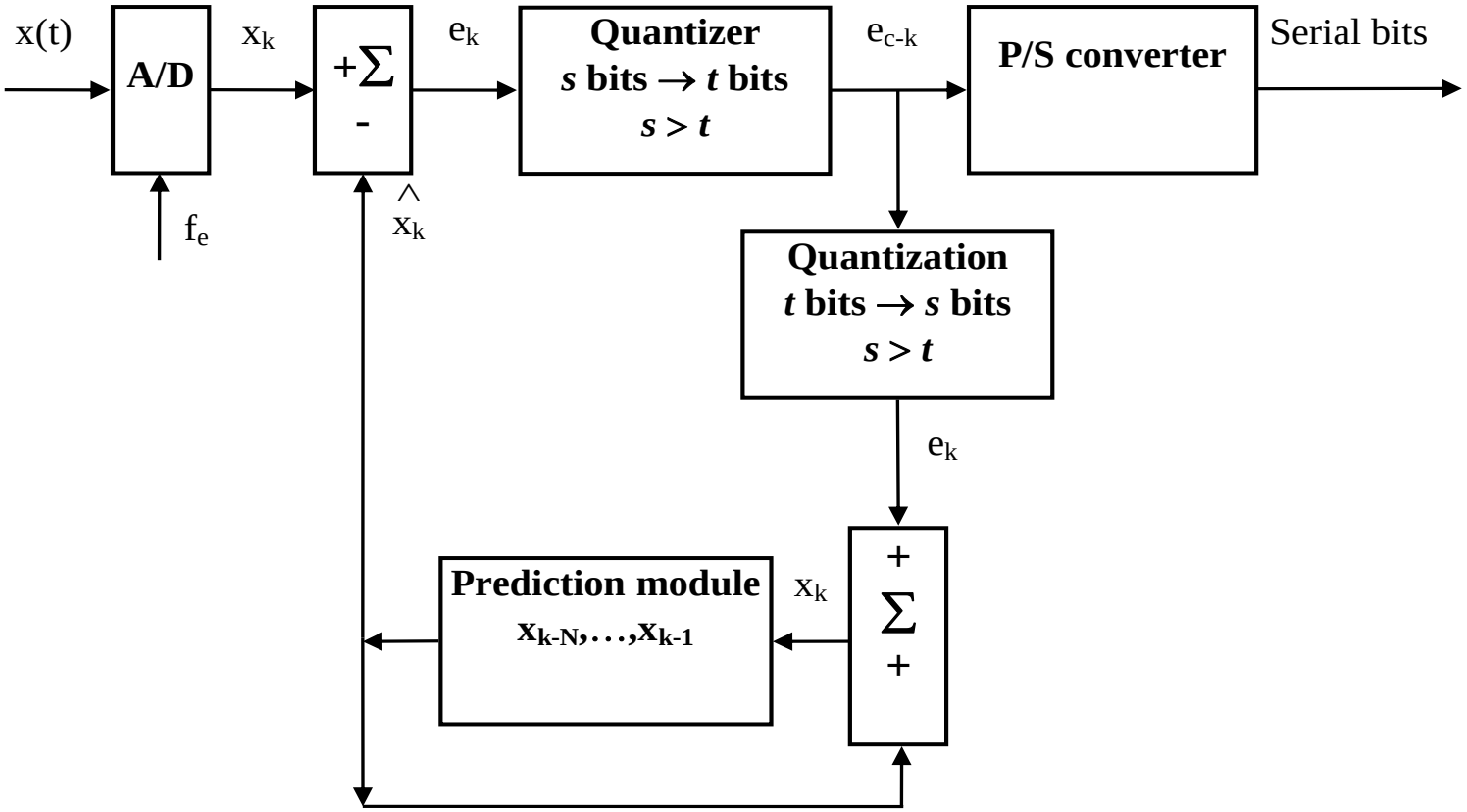

DPCM modulation

- Block schematic of the decoder;
  - The predictor works with N samples;
  - q_k – quantization errors.

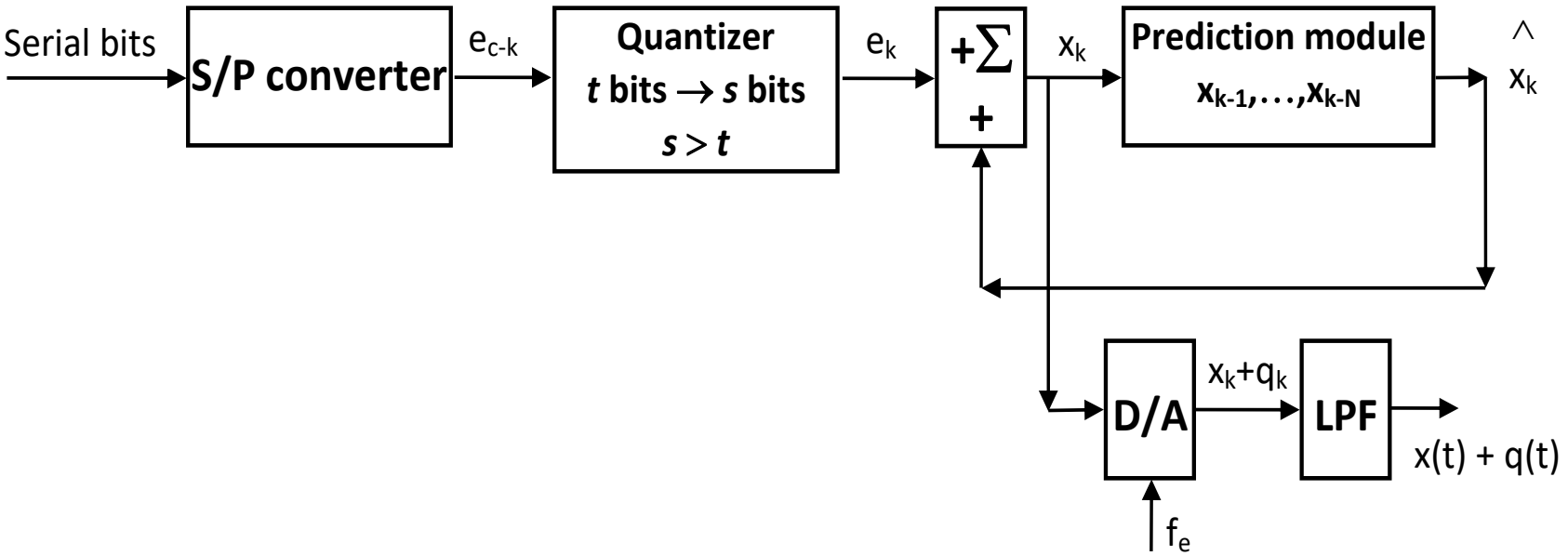

Delta modulation

- The (non-adaptive) Delta modulation;
  - Particular case of DPCM modulation;
  - The signal quantization is performed on a single bit;
  - It is necessary a strong correlation between the consecutive samples;
  - The computation of the predicted signal is realized based on some fixed methods independent of the variation law of the previous samples;
  - Block schematic of the modulator and demodulator:

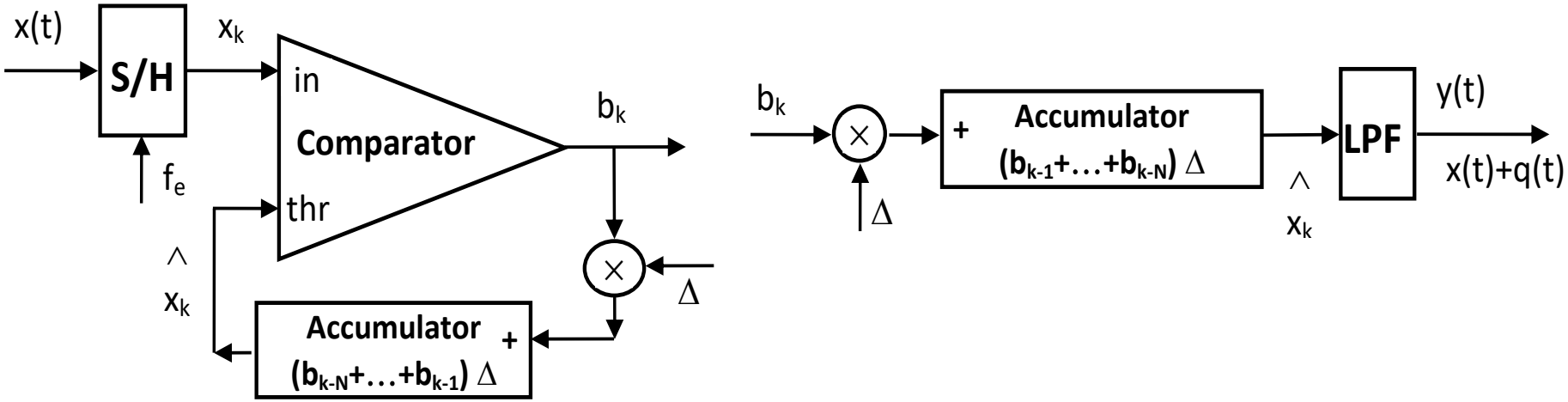

Delta modulation

- Basic relations;
  - Describe the computation of the current bit, of the predicted signal and of the current quantization step:
    - computation of the current transmitted bit: $\begin{cases} x_k \geq \hat{x}_k = y_k \Rightarrow b_k = '1' \ (+1) \\ x_k < \hat{x}_k = y_k \Rightarrow b_k = '0' \ (-1) \end{cases}$
    - computation of the predicted signal (the equation of the accumulator): $y_{k+1} = y_k + b_k \cdot \Delta_k$
    - computation of the quantization step: $\Delta_k = f\left(\Delta_{k-1}, b_k, b_{k-1}, \ldots b_{k-N}\right)$
  - In the case of non-adaptive Delta modulation the quantization step is constant $= \Delta$;
  - Implementation methods of the accumulator:
    - analog implementation of the accumulator:

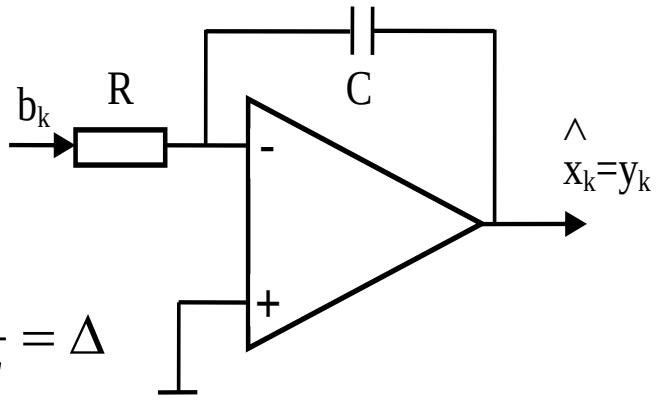

$$\left|\Delta V_c\right| = \frac{1}{R \cdot C}\int_0^{T_s} b_k dt = \frac{b_k \cdot T_s}{R \cdot C} = \Delta; if \ b_k = 1 \Rightarrow \frac{T_s}{R \cdot C} = \Delta$$

Delta modulation

- digital implementation using a counter and a D/A converter:
  - N – the number of bits of the D/A converter;

$$\Delta_{Delta} = \Delta_{D/A\,converter} = \frac{V_{ref}}{2^N}$$

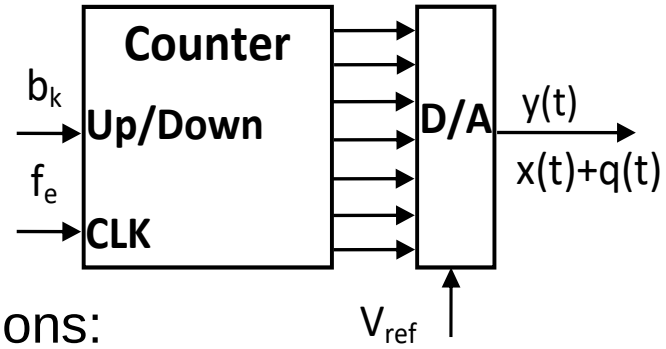

- Distortions which affect the Delta modulations:
  - the slope overload distortions:
    - appears if the slope of the source signal is larger than that of the predicted signal;
  - the granular distortion (granular noise);
    - represents a quantization noise;
    - appears if the slope of the source signal is smaller than that of the predicted signal;

$$\begin{cases} source\ signal\ slope = \left|\frac{dx(t)}{dt}\right| \\ Delta\ signal\ slope = \frac{\Delta}{T_s} \end{cases}$$

- Computation of the quantization noise power and of the quantization SNR:
  - it is considered that $f_s=2f_m$ (f_m – the maximum frequency of the spectrum);

Delta modulation

- it is considered that we do not have slope overload distortion and that the power of the signal, P, can be expressed according to the slope of the signal;

$$\begin{cases} \left|\frac{dx(t)}{dt}\right| = \Delta \cdot f_s \\ \left|\frac{dx(t)}{dt}\right| \approx K \cdot \sqrt{P} \end{cases}$$

- the quantization noise is computed in the following way:

$$P_{n-q} = \frac{\Delta^2}{12} \cdot \frac{f_s}{f_s} = \frac{\Delta^2}{12} \cdot \frac{2 f_m}{f_s} = \frac{\Delta^2 \cdot f_m}{6 f_s}$$

$$SNR_{Delta} = \frac{P}{P_{n-q}} = \frac{6 \cdot f_s^3}{K^2 \cdot f_m}$$

- Distortions affecting the Delta modulated signal:

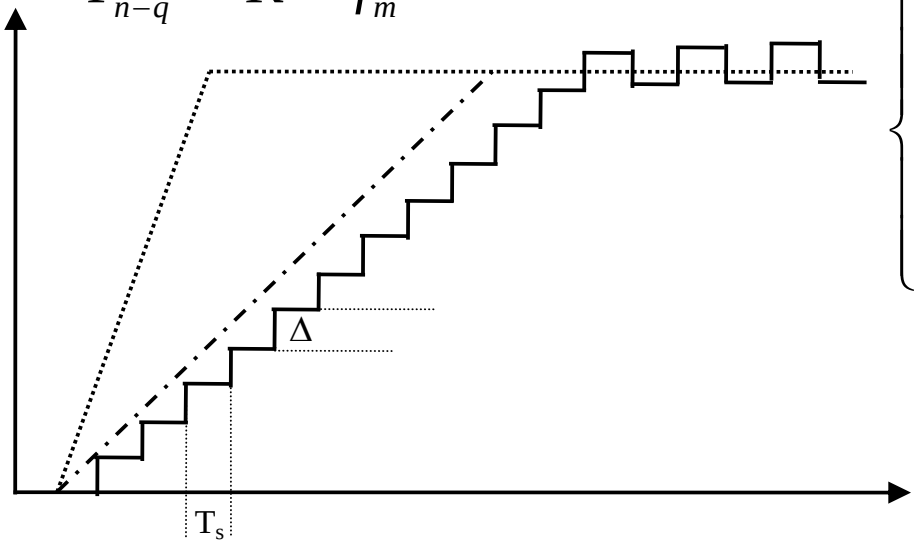

$$\begin{cases} P = \frac{\Delta^2 \cdot f_s^2}{K^2} \\ P_{n_q} = \frac{\Delta^2}{12} \end{cases}$$

Delta modulation

- Adative Delta modulation;
  - The quantization step is adjusted according to the slope of the source signal;
  - The measurement of the slope is based on the modulated bit sequence;
  - The schematics of the adaptive Delta encoder and decoder;

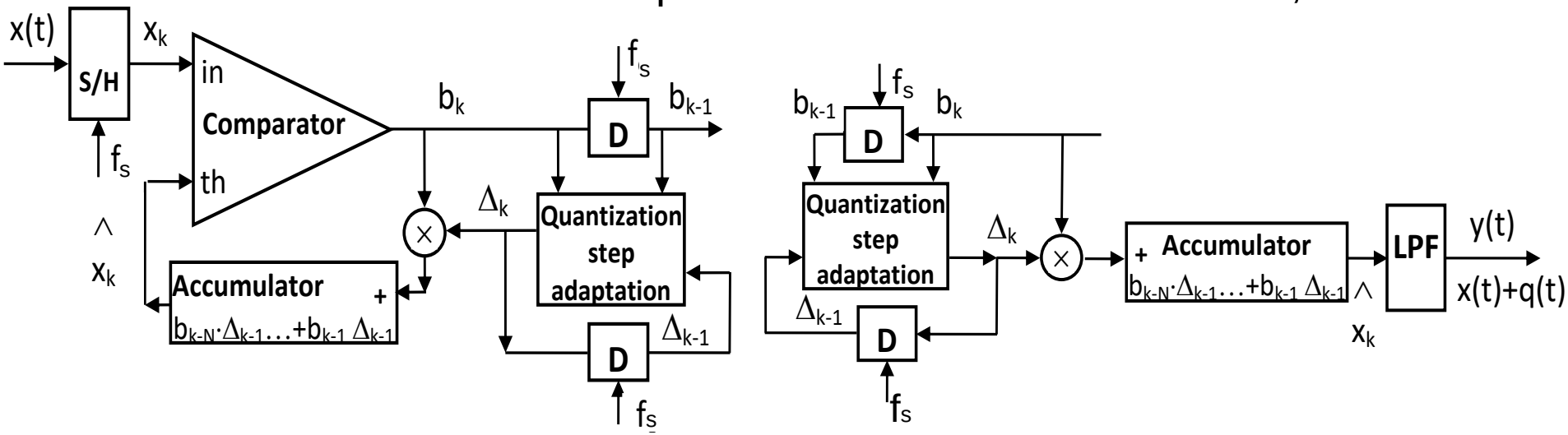

  - Types of adaptive Delta modulations – according to the quantization step adjustment rules:
    - Song modulation;
    - Jayant modulation;

Delta modulation

- Song modulation;
  - Quantization step adjustment:
- Modulaţia Jayant;
  - Quantization step adjustment :

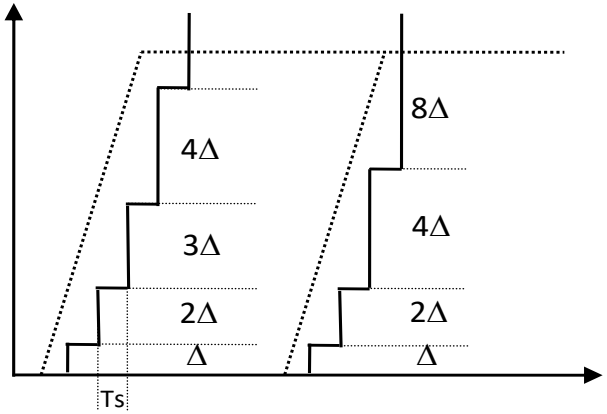

$$\begin{cases} \Delta_k = \Delta_{k-1} + \Delta & if\ b_k = b_{k-1} \\ \Delta_k = \Delta_{k-1} - \Delta & if\ b_k \neq b_{k-1} \\ if\ \Delta_k < \Delta \Rightarrow \Delta_k = \Delta \end{cases}$$

$$\Delta_k = \Delta_{k-1} \cdot p^{sgn(b_k \cdot b_{k-1})}$$

$$\begin{cases} \Delta_k = \Delta_{k-1} \cdot p & if\ b_k = b_{k-1} \\ \Delta_k = \Delta_{k-1} / p & if\ b_k \neq b_{k-1} \end{cases}$$

- Computation/measurement of the quantization noise power:
  - Can be used the mean square error (mse) between the source and the predicted signal:

$$mse = \frac{\sum_{k=1}^{M} \left(x_k - \overline{x_k} \right)^2}{M}$$

    - the predicted signal represents the demodulated signal;

The PCM primary multiplex

- The principle of PCM multiplexing:

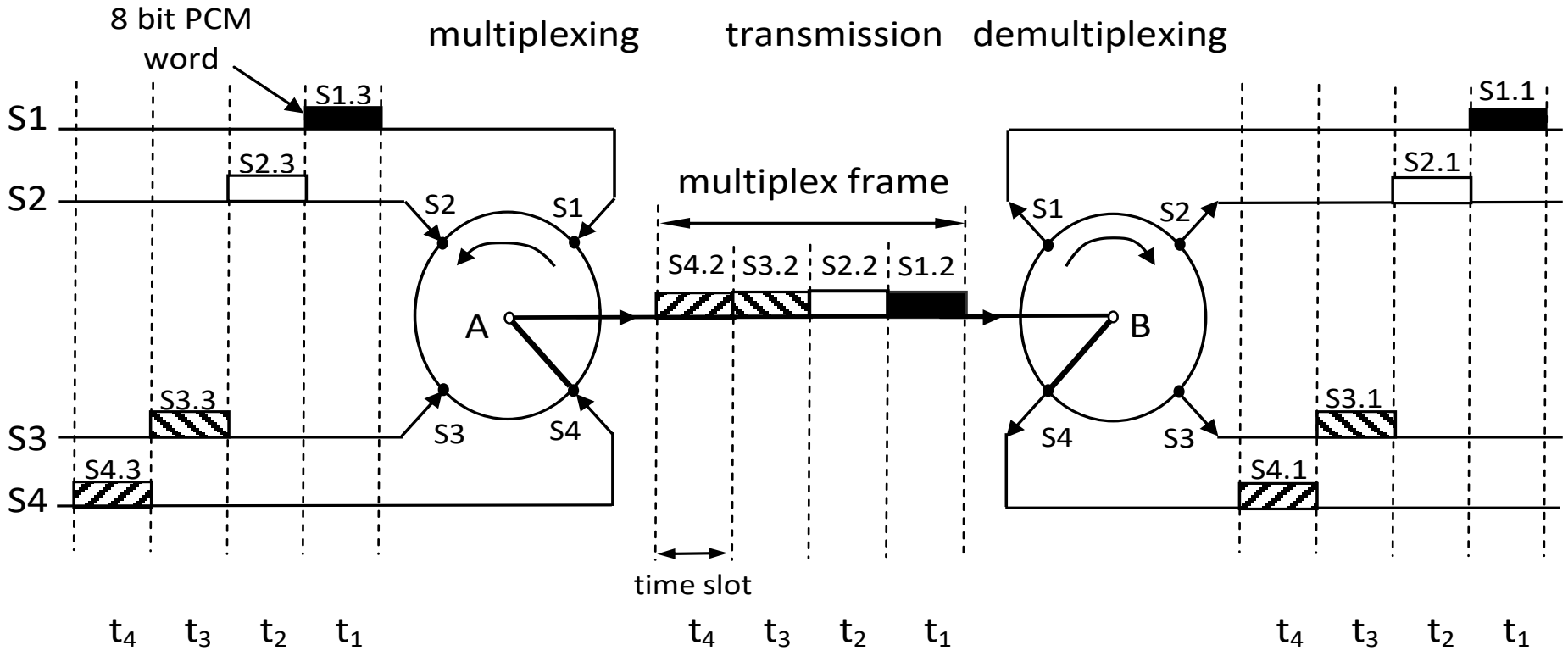

- The PCM multiplexing is the first level of multiplexing;
  - uses a time division multiplexing of the telephone channels, the multiplexing process being strongly related to the switching process;

The PCM primary multiplex

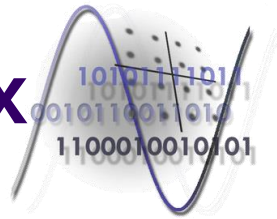

- to each 8 bit PCM word is allocated a time interval – *time slot,* interval in which the bits are transmitted;
- PCM words generated by different sources are interleaved, a separate time slot corresponding to each word;
- the bit rate assigned to the multiplex frame must be N times larger than the bit rate assigned to one of the multiplexed channels, N being the number of the multiplexed channels;
- the demultiplexing implies the identification of the time slots assigned to different channels and the transmission to the destination of the words extracted from the time slots, using a bit rate characteristic to the terminal equipment;

The E1 PCM frame. Structure & operations

- The structure of the E1 frame;

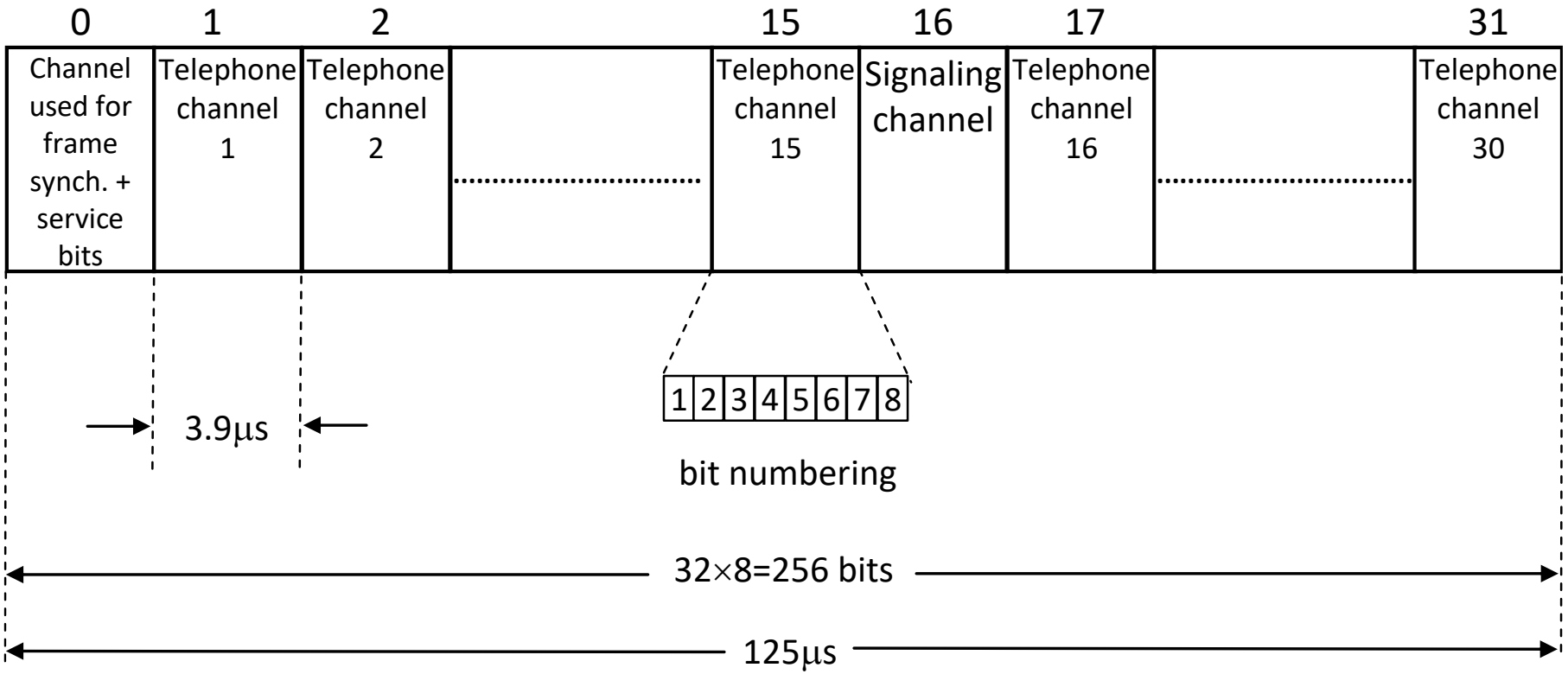

- The E1 frame includes 32 elementary channels of 64kbps;
  - the bit rate associated to this frame is 2,048Mbps; clock precision: ±50ppm;
  - can be defined fractional frames with a smaller no. of available channels;

The E1 PCM frame. Structure & operations

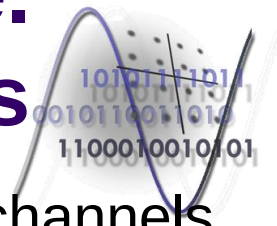

- 30 channels are used for voice transmissions, namely channels 1 ÷ 15 and 17 ÷ 31;
- Channel (slot) 0 is used for frame synchronization and service bits;
- Channel 16 is used for multiframe synchronizations, service bits and signaling operations;
  - it is a channel dedicated especially to signaling operations;
- There are two operation modes on channel 16, namely:
  - Channel Associated Signaling – CAS;
  - Common Channel Signaling – CCS;
  - for the management of the CAS signaling a multiframe is composed by grouping 16 PCM frames.
- If the E1 is used for data transmissions (for ex. to transport Ethernet frames) there are not defined channels/slots;
  - it is about a stream of bits with 2.048Mbps rate at the disposal of the user;

E1 PCM frame. Structure & operations

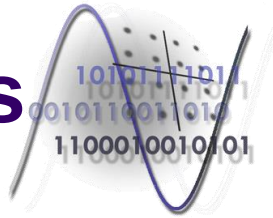

- There are two operation modes on channel 0, namely:
  - normal mode without CRC (*Cyclic Redundancy Check*);
  - CRC-4 mode, which uses CRC error control.
- Structure of the E1 PCM multiframe;
  - normal operation on slot 0 and CAS signaling on slot 16;

Frame number	Time slot 0 Bit number								Time slot 16 Bit number							
	1	2	3	4	5	6	7	8	1	2	3	4	5	6	7	8
0	Y	0	0	1	1	0	1	1	0	0	0	0	X	Z	X	X
1	Y	1	Z	X	X	X	X	X	Signaling ch. 1				Signaling ch. 16			
2	Y	0	0	1	1	0	1	1	Signaling ch. 2				Signaling ch. 17			
3	Y	1	Z	X	X	X	X	X	Signaling ch. 3				Signaling ch. 18			
4	Y	0	0	1	1	0	1	1	Signaling ch. 4				Signaling ch. 19			
5	Y	1	Z	X	X	X	X	X	Signaling ch. 5				Signaling ch. 20			
6	Y	0	0	1	1	0	1	1	Signaling ch. 6				Signaling ch. 21			
7	Y	1	Z	X	X	X	X	X	Signaling ch. 7				Signaling ch. 22			
8	Y	0	0	1	1	0	1	1	Signaling ch. 8				Signaling ch. 23			
9	Y	1	Z	X	X	X	X	X	Signaling ch. 9				Signaling ch. 24			
10	Y	0	0	1	1	0	1	1	Signaling ch. 10				Signaling ch. 25			
11	Y	1	Z	X	X	X	X	X	Signaling ch. 11				Signaling ch. 26			
12	Y	0	0	1	1	0	1	1	Signaling ch. 12				Signaling ch. 27			
13	Y	1	Z	X	X	X	X	X	Signaling ch. 13				Signaling ch. 28			
14	Y	0	0	1	1	0	1	1	Signaling ch. 14				Signaling ch. 29			
15	Y	1	Z	X	X	X	X	X	Signaling ch. 15				Signaling ch. 30			

- TS0 in even frames: Y0011011 – frame synchronization word ;
- TS0 in odd frames: Y1ZXXXX;
- Y international bit;
- Z frame synch. loss alarm bit;
- X - not used (national bits);
- TS16 în frame 0 : 0000XZXX ; in frames 1 – 15 : signaling for voice channels;
- 0000 – multiframe synchronization;
- Z – multiframe synch. loss alarm;
- X – not used (national bits);

The E1 PCM frame. Structure & operations

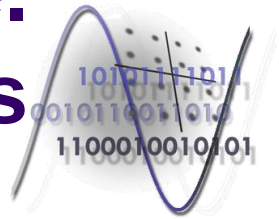

- The structure of the E1 PCM multiframe;
  - CRC-4 mode in slot 0;

Sub-multiframe number	Frame number	Frame type	Time slotd 0 Bit number							
			1	2	3	4	5	6	7	8
I	0	FAS	C_1	0	0	1	1	0	1	1
	1	NFAS	0	1	Z	X	X	X	X	X
	2	FAS	C_2	0	0	1	1	0	1	1
	3	NFAS	0	1	Z	X	X	X	X	X
	4	FAS	C_3	0	0	1	1	0	1	1
	5	NFAS	1	1	Z	X	X	X	X	X
	6	FAS	C_4	0	0	1	1	0	1	1
	7	NFAS	0	1	Z	X	X	X	X	X
II	8	FAS	C_1	0	0	1	1	0	1	1
	9	NFAS	1	1	Z	X	X	X	X	X
	10	FAS	C_2	0	0	1	1	0	1	1
	11	NFAS	1	1	Z	X	X	X	X	X
	12	FAS	C_3	0	0	1	1	0	1	1
	13	NFAS	E	1	Z	X	X	X	X	X
	14	FAS	C_4	0	0	1	1	0	1	1
	15	NFAS	E	1	Z	X	X	X	X	X

FAS – “Frame Alignment Signal” = 001011;

NFAS – “Non Frame Alignment Signal”;

C_1 – C_4 – “Cyclic Redundancy Check-4” bits;

E – CRC-4 error indicator bits;

Z – alarm bit;

X – unused bits.

The E1 PCM frame. Structure & operations

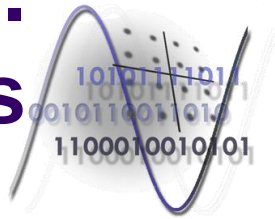

- In CRC-4 mode on slot 0 the Y bits from frames with even number are used to transmit CRC sequences on 4 bits;
  - in the Y bits from frames 0, 2, 4 and 6 is transmitted a C_1 C_2 C_3 C_4 sequence used for bit error detection in frames 0 – 7 of the previous multiframe ;
  - in the Y bits from frames 8, 10, 12 and 14 is transmitted a C_1 C_2 C_3 C_4 sequence used for bit error detection in frames 8 – 15 of the previous multiframe;
  - the generator polynomial used for computation of the CRC-4 sequence is: $p(x) = x^4 + x + 1$
    - the non-detection probability of bit error packets with more than 4 error is 6.25%;
    - the detection probability of these error packets is 93.75%;
    - all error packets with at most 4 errors are detected.
  - Remark: in the normal frame, without CRC can be monitored only 7 bits (the frame synchronization bits) in each group of 512 bits;

The E1 PCM frame. Synchronization

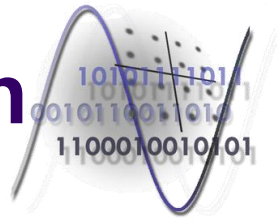

- Aspects related to frame synchronization;
  - Loss of frame synchronization detection:
    - three consecutive frames with FAS errors or,
    - three consecutive bit errors in position two in frames without FAS or,
    - bit error probability higher then 10^{-3};
      - the FAS signal is monitored for this error detection;
    - in CRC-4 working mode 1000 CRC comparison are performed in a second;
      - if the threshold of 914 bad comparisons (91.4%) is exceeded it is declared loss of frame synchronization;
      - it ensures a better frame synchronization, being avoided the problem of frame alignment sequence (FAS) simulation.

The E1 PCM frame. Synchronization

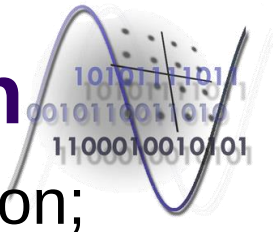

- Aspects related to frame and multiframe synchronization;
  - Loss of multiframe synchronization detection in the CAS case:
    - two consecutive MFAS signals with errors or,
    - two multiframes with all zero bits in slot 16;
  - Frame and multiframe synchronization detection:
    - **Normal frame synchronization:**
      - FAS received correctly, bit two in NFAS is “1”, next FAS received correctly;
    - **Multiframe synchronization with CAS:**
      - MFAS received correctly and slot 16 of the previous frame is not zero;
    - **Multiframe synchronization with CRC:**
      - bit in position one of NFAS frames generates the sequence: 0 0 1 0 1 1;
        - it is realized an initial frame and multiframe synchronization;
      - at least 2 CRC MFAS must be correctly received in a 8ms time interval (4 CRC-MF), between these CRC MFAS detections being a time interval of 2ms or multiples of this value;
        - it is realized a check and validation of the synchronization based on the CRC control sequence.

The E1 PCM frame. Alarms

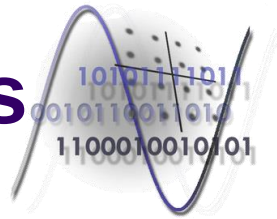

- Alarms associated to frame E1;
  - Frame alarm (remote alarm) bit:
    - bit Z of slot 0 (named also bit A);
      - (yellow alarm – transmitted to the opposite end);
      - value 0 – normal operation, value 1 – alarm event: power supply interruption, codec failure, loss of input signal, FAS error, bit error probability higher then 10^{-3};
        - any of these event generates a **red alarm** at the end where they take place (where are detected);
        - the equipment which receives bit Z=1, declares **yelow alarm**;
  - Multiframe alarm (remote alarm) bit:
    - bit Z of slot 16 frame 0 (called also bit A);
      - value 0 – normal operation, value 1 – loss of MFAS signal (yellow alarm transmitted to the opposite end);
  - The Z (or A) bit signals remote alarm – RAI : „Remote Alarm Indication”;

The E1 PCM frame. Alarms

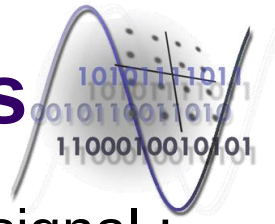

- AIS – „Alarm Indication Signal” – called also keep alive signal ;
  - the AIS represents at least 509 “1” bits in a block of 512 bits or less than 3 “0” bits in 2 multiframes (in the case of slot 16 less than 3 “0” in this slot during two consecutive multiframes);
  - the terminal equipment which detects the AIS signal declares AIS state called also **blue alarm**;
    - AIS - generated by a multiplexer to the terminal equipment when it is detected a frame loss, signal loss or multiframe loss;
      - the output channels transmit continuous “1” – it is possible to maintain the clock synchronization between the two equipment;
      - or, only in slot 16 it is transmitted a continuous “1” (MFAS error);
    - AIS - generated by a multiplexer when it receives a yellow alarm from the opposite end (multiplexer) - it is a continuous “1” signal;
      - it is possible to maintain the clock synchronization between multiplexers;
    - AIS - generated by a multiplexer to the terminal equipment when it receives a yellow alarm;
      - can be detected by the terminal equipment (if we do not have LOS or LOF) and that equipment declares AIS state.

The E1 PCM frame. Alarms

- The LOS and LOF events generate a red alarm;
  - in the case of the loss of multiframe synchronization a yellow alarm is transmitted to the opposite end using the dedicated Z bit;
    - the equipment detecting the loss of multiframe synchronization and the equipment detecting multiframe yellow alarm generate an AIS signal in slot 16;

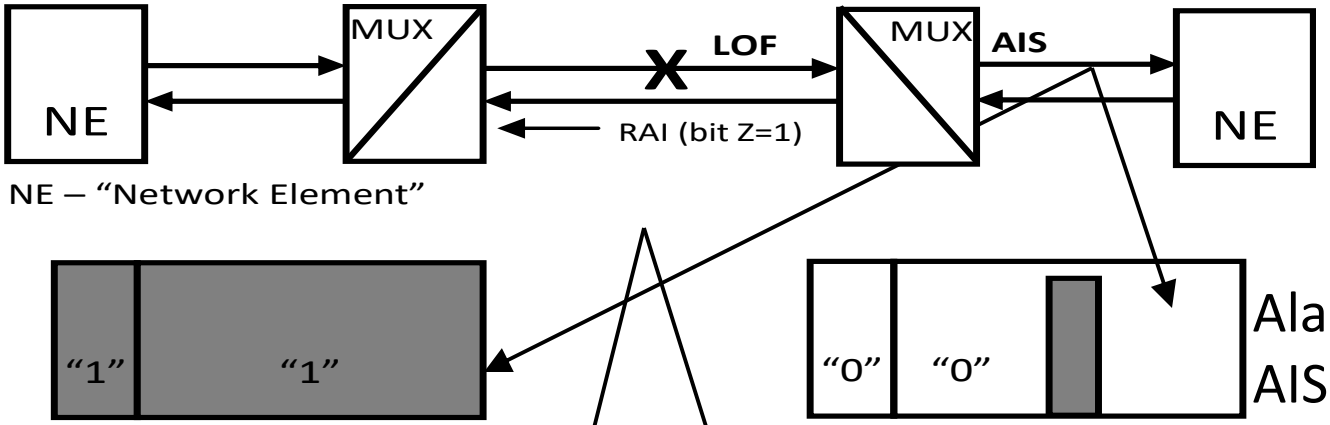

Alarm management and AIS signal generation

Frame	Time slot 0							
0	Y	0	0	1	1	0	1	1
1	Y	1	**Z=1**	X	X	X	X	X
2	Y	0	0	1	1	0	1	1
3	Y	1	**Z=1**	X	X	X	X	X
4	Y	0	0	1	1	0	1	1

Frame	Time slot 16							
0	0	0	0	0	X	**Z=1**	X	X
1	A_1	B_1	C_1	D_1	A_{16}	B_{16}	C_{16}	D_{16}
2	A_2	B_2	C_2	D_2	A_{17}	B_{17}	C_{17}	D_{17}
3	A_3	B_3	C_3	D_3	A_{18}	B_{18}	C_{18}	D_{18}
4	A_4	B_4	C_4	D_4	A_{19}	B_{19}	C_{19}	D_{19}

The T1 PCM frame. Structure & operations

- The structure of the T1 frame;

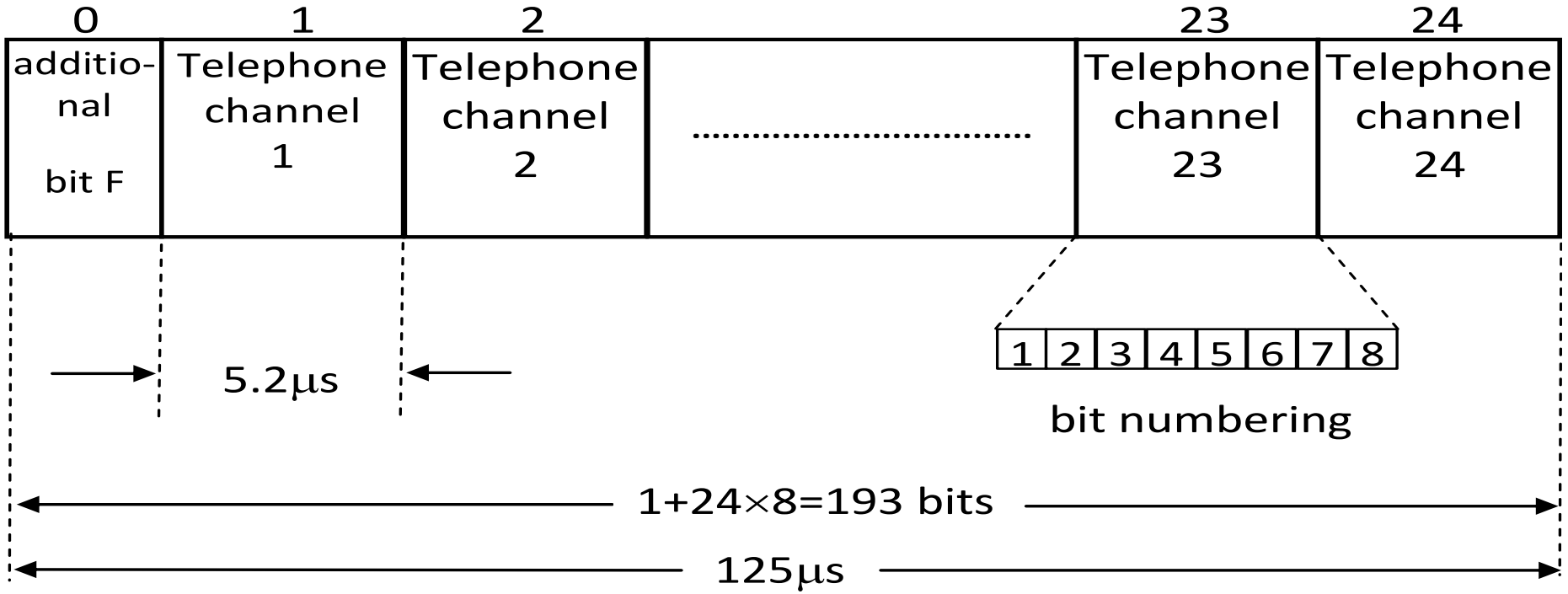

- The T1 multiplex frame includes 24 telephone channels + 1 bit additional, the F bit;
  - bit F is used for synchronization or for implementation of a special data channel;

The T1 PCM frame. Structure & operations

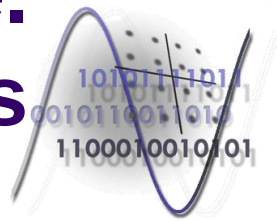

- Types of T1 multiframes:
  - The Supper Frame (SF);
    - composed of 12 frames;
    - has no separate time slot for synchronization or signaling;
      - the frame and the multiframe synchronization is accomplished with the help of the supplementary F bit;
      - for channel assigned signaling it is used the last bit of each sixth frame : A – B type signaling;
        - this technique is called bit robbing;
      - for CCS signaling is used the slot 24 of the T1 frame;
      - in the case of SF frame the yellow alarm is transmitted by setting the bit no. 2 of each slot to 0;

The T1 PCM frame. Structure & operations

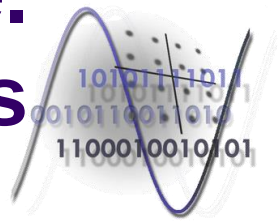

- The structure of T1 PCM SF multiframe;

Frame number	Use of bit F		Number of info. bits per channel	Signaling bit position	Signaling channel
	Frame synch.	Multiframe synch.			
1	1	-	8	-	-
2	-	0	8	-	-
3	0	-	8	-	-
4	-	0	8	-	-
5	1	-	8	-	-
6	-	1	7	8	A
7	0	-	8	-	-
8	-	1	8	-	-
9	1	-	8	-	-
10	-	1	8	-	-
11	0	-	8	-	-
12	-	0	7	8	B

The T1 PCM frame. Structure & operations

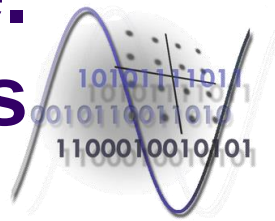

- Types of T1 multiframes:
  - The Extended Supper Frame (ESF);
    - composed of 24 frames;
    - the F bit is used for frame and multiframe synchronization and other purposes;
      - a special synchronization sequence, having the structure 0 0 1 0 1 1, located in frames with frame number multiple of 4;
      - the frames having an odd number implement a 4kbps bit rate data channel, the M channel (management, control, alarms);
      - in even number frames whose number is not a multiple of 4 it is transmitted a CRC-6 control sequence;
    - the transmission of the signaling is accomplished in a similar way as in the case of SF multiframe:
      - the 8-th bit of each channel of every sixth frame is used for CAS signaling;
        - 4 bits for CAS signaling for each channel: bits A, B, C and D.

The T1 PCM frame. Structure & operations

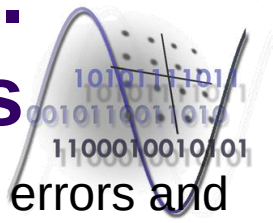

- the CRC mechanism used detects all error packets with at most 6 errors and detects 98.4% of error packets with more than 6 errors;
- two type of signals can be transmitted on the M data channel :
  - bit oriented signals which are unscheduled messages;
    - they begin with a “1” byte followed by a “0” bit, a command/message identifier on 6 bits and finally a “0” bit follows;
    - the 6 bit identifier encodes alarms and different messages: protection switching activation, loop-back activation, a.s.o.
    - the yellow alarm is coded: 11111111 00000000;
    - the messages with high priority are transmitted continuously at least one second and the low priority messages are repeated ten times;
  - message oriented signals – consists of data packets composed of header, address field, control field, information field and error control field (CRC);
    - they are transmitted in each second and contain:
    - CRC errors, synch. errors, coding rule violations;
    - are controlled by a communication protocol;
    - can be interrupted by bit oriented signals.

The T1 PCM frame. Structure & operations

- The structure of the T1 PCM ESF multiframe with CAS signaling;

Frame number	Use of bit F			Number of info. bits per channel	Signaling bit position	Signaling channel
	Frame synch	Data link	CRC-6			
1	-	M	-	8	-	-
2	-	-	C_1	8	-	-
3	-	M	-	8	-	-
4	0	-	-	8	-	-
5	-	M	-	8	-	-
6	-	-	C_2	7	8	A
7	-	M	-	8	-	-
8	0	-	-	8	-	-
9	-	M	-	8	-	-
10	-	-	C_3	8	-	-
11	-	M	-	8	-	-
12	1	-	-	7	8	B
13	-	M	-	8	-	-
14	-	-	C_4	8	-	-
15	-	M	-	8	-	-
16	0	-	-	8	-	-
17	-	M	-	8	-	-
18	-	-	C_5	7	8	C
19	-	M	-	8	-	-
20	1	-	-	8	-	-
21	-	M	-	8	-	-
22	-	-	C_6	8	-	-
23	-	M	-	8	-	-
24	1	-	-	7	8	D

The T1 PCM frame. Alarms

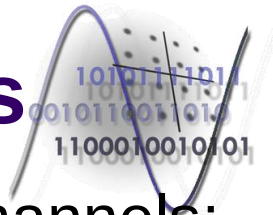

- Can be defined fractional T1 frames with less used channels;
  - Some channels of the frame are not available to the users;
    - the frame has assigned a smaller (useful) information rate for transmission;
    - the transport network has to take a smaller rate from the users;
  - If the T1 link is used for data transmissions there are not defined channels/slots – the framing bit can be kept;
- The T1 alarms (shortly);
  - OOF (“Out Of Frame Condition”): 2 of 4, 2 of 5 or 3 of 5 synchronization bits are erroneous;
  - Red CFA (“Carrier Failure Alarm”): OOF for 2.5s; end of this state: no OOF for 1s;
  - Yellow CFA – yellow alarm transmitted to the opposite end;
  - LOS (“Loss Of Signal”): no impulse detected in a window of 175+/-75 impulse periods (100 – 250 bits);

Line interface of the primary multiplex

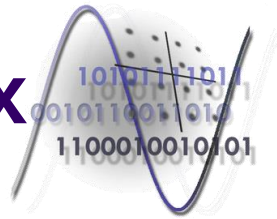

- Transmission of the E1 frame;
  - 4 wire full duplex transmission;
    - AMI (*Alternate Mark Inversion*) coding;
      - the “0” bit is coded with a 0V level and the “1” bits are alternatively coded with ± A impulses;
        - this code has no DC component (it is avoided the saturation of the separation transformer’s core);
        - has relatively narrow bandwidth;
        - simple decoding;
        - reduced synchronization capability;
      - it is replaced with a HDB3 (*High-Density-Bipolar-3 Zeros*) coding;
        - this code replaces groups of 4 zeros with violations of AMI coding rule – it is ensured also a reduced level of the DC component.

Line interface of the primary multiplex

The last impulse on line	Number of impulses from the last replace	
	Odd	Even
negative	0 0 0 -	+ 0 0 +
positive	0 0 0 +	- 0 0 -

- The HDB3 coding rule;

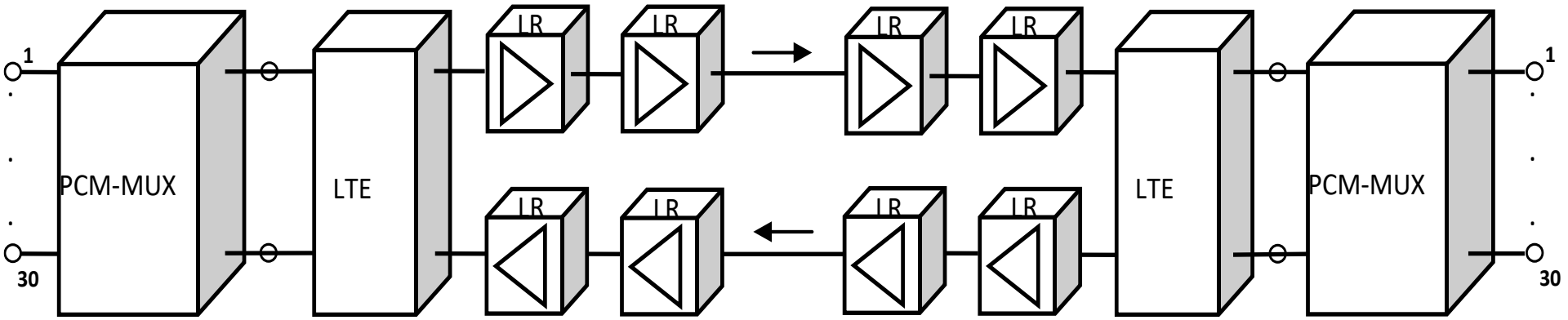

LTE – “Line Terminating Equipment”

LR – “Line Regenerator”

- E1 transmission system;

Line interface of the primary multiplex

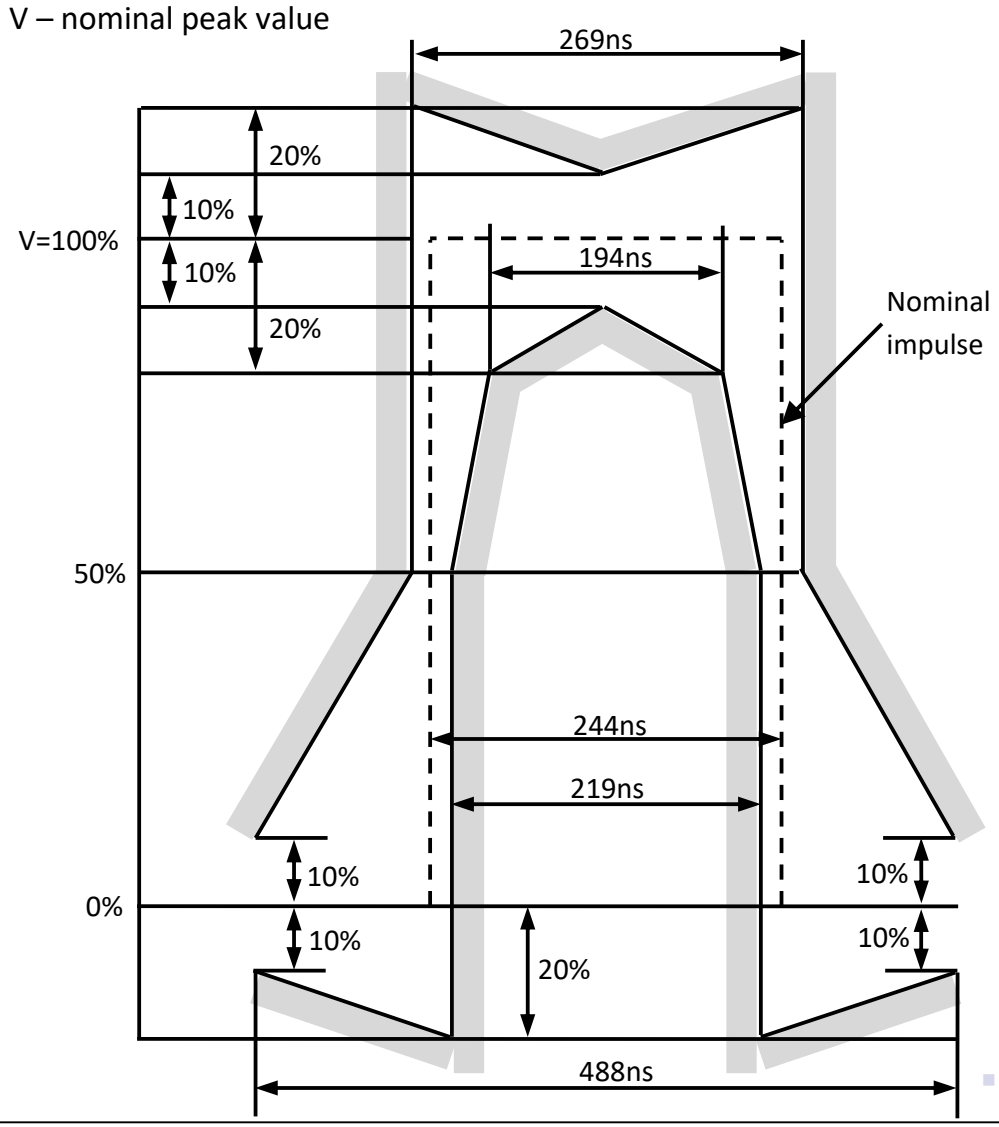

- Coded impulse mask;

Line interface of the primary multiplex

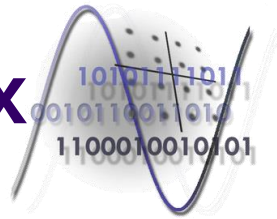

- (E1) line interface parameters:
  - Nominal bit rate: 2048kbps;
  - Precision of the nominal bit rate: at least ± 50ppm;
  - Line code: HDB3;
  - Frame structure;
  - Transmission medium / Number of pairs in each direction;
    - Coaxial; Twisted pairs; 1 cable / 1 pair for each transmission direction;
  - Load impedance: 75Ω (coaxial), 120Ω (twisted pair);
  - Peak amplitude: 2.37V – 3V;
  - Power level and power spectral mask;
  - Impulse nominal duration: 244ns;
  - Ration of positive and negative amplitudes: 0.95 – 1.05;
  - Ratio of positive/negative pulse duration: 0.95 – 1.05;
  - Maximum peak to peak jitter;
  - DC power: has to be as low as possible;

Line interface of the primary multiplex

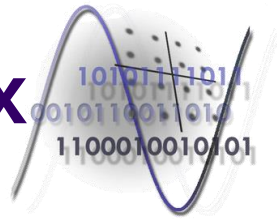

- T1 interface specific characteristics:
  - Transmission of T1 frames is similar to the transmission of E1 frames;
    - 4 wire full duplex with regenerators after each 1.5km cable length;
  - B8ZS *(Bipolar with 8 Zero Substitution)* line coding;
    - AMI type cod which replaces the groups of 8 consecutive zero bits with a coded sequence having the structure: 0 0 0 V B 0 V B;
      - 3 “0” symbols, a violation of the AMI coding rule, followed by a binary symbol encoded normally, a “0” symbol, after that a new violation of the AMI coding rule and finally a binary symbol encoded normally.

Terminal – multiplexer interface

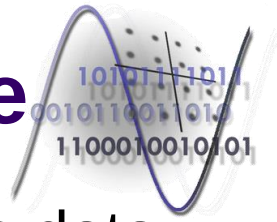

- There are defined two types of interfaces between the data equipment and the multiplexer;
  - These correspond to two transmission strategy of data transmission and synchronization;
  - Codirectional interfaces;
    - correspond to the case when each equipment transmits the data together with his own synchronization signal;
      - all equipment must have the clock synchronized with an external source;
  - Contradirectional interfaces;
    - the multiplexer transmit the synchronization information for both transmission directions;
      - it is not necessary an external synchronization source;

Terminal – multiplexer interface

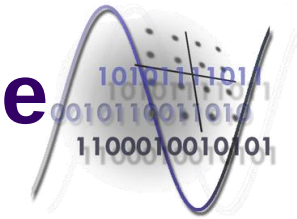

- Codirectional interfaces;
  - A complex signal, combining both the information and the synchronization signals (bit clock and byte clock) is transmitted between the two connected equipment;
  - A single channel composed of a pair of wire is used in each directions;
    - separation transformers are usually used.
  - Precision of the clock signal: at least ±100ppm;
  - The clock generator of each equipment (multiplexer or terminal equipment) is synchronized with an external reference clock;

Terminal – multiplexer interface

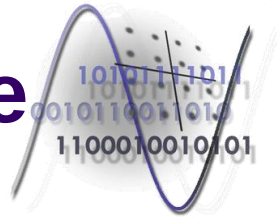

Codirectional interface – principle;
channels used;

Codirectional interface – technical details;
combined data and synchronization channels

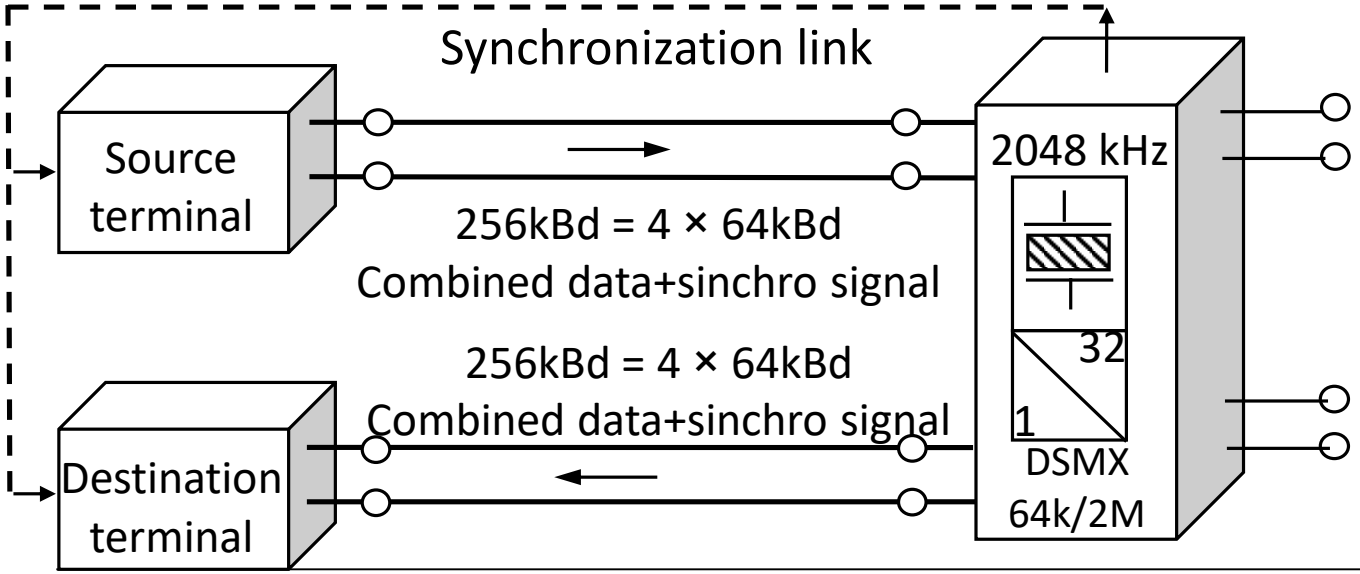

Terminal – multiplexer interface

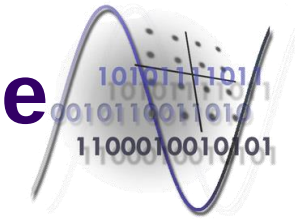

- Codirectional interface – the coding rule;
  - step 1: the period corresponding to the 64kbps rate is split in 4 unit intervals;
  - step 2: a binary “1” (64kbps rate) is coded as a block of 4 binary symbols (each having a period 4 times smaller): “1 1 0 0”; “0” represents 0V;
  - step 3: a binary “0” (64kbps rate) is coded as a block of 4 binary symbols (each having a period 4 times smaller): “1 0 1 0”;
  - step 4: the coded data signal is converted into a 3 level signal by alternating the polarity of consecutive blocks of 4 symbols;
  - step 5: the alternation of the polarity of the blocks is violated every 8th block, meaning the position corresponding to bit 8 in a byte;
    - in this way can be achieved the byte level synchronization between the two equipment.

Terminal – multiplexer interface

- Codirectional interface – coding rule;

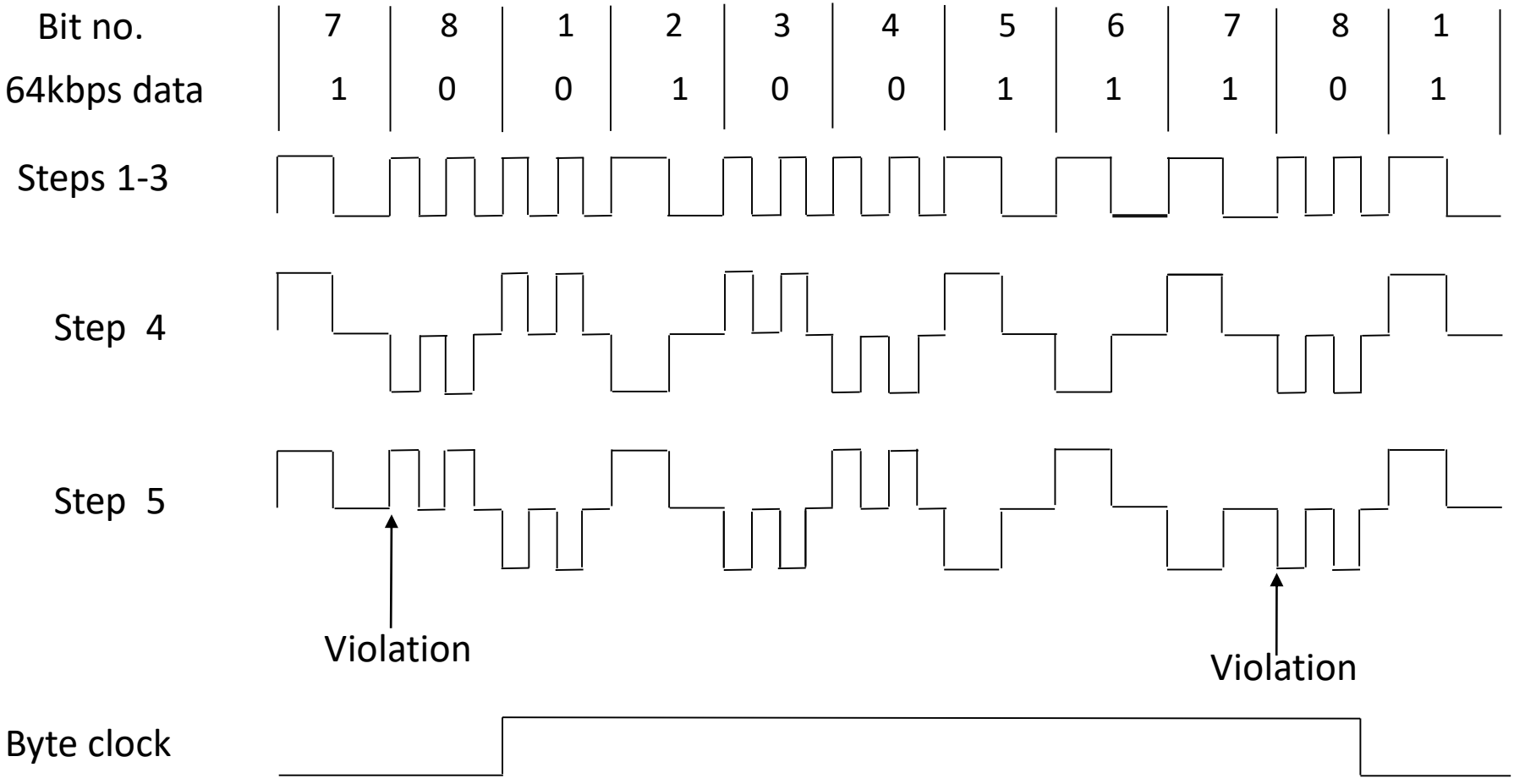

Terminal – multiplexer interface

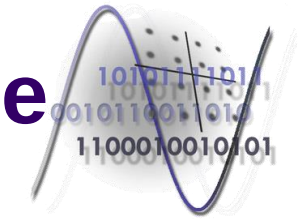

- Contradirectional interfaces;
  - Both the data signal and the synchronization signal is transmitted between the data equipment and the multiplexer;
  - The synchronization signal is transmitted from multiplexer to data equipment;
  - There are necessary two channels, each on a pair of wire, in both directions: data and synchronization
    - bit clock and byte clock;
  - Precision of the clock signal: at least ±100 ppm;
  - It is not necessary an external reference clock;

Terminal – multiplexer interface

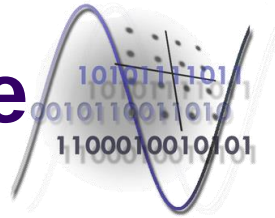

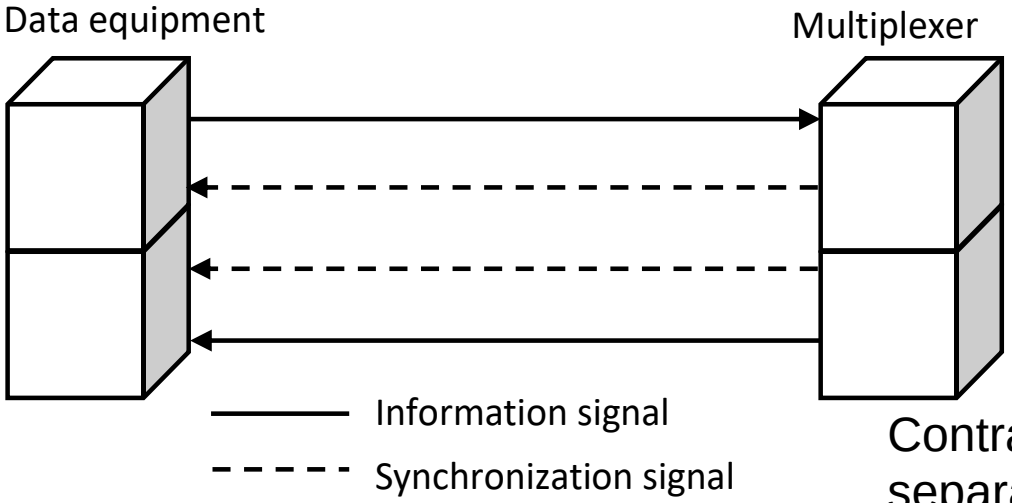

Contradirectional interface – principle; channels used.

Contradirectional interface – technical details; separate data and synchronization channels.

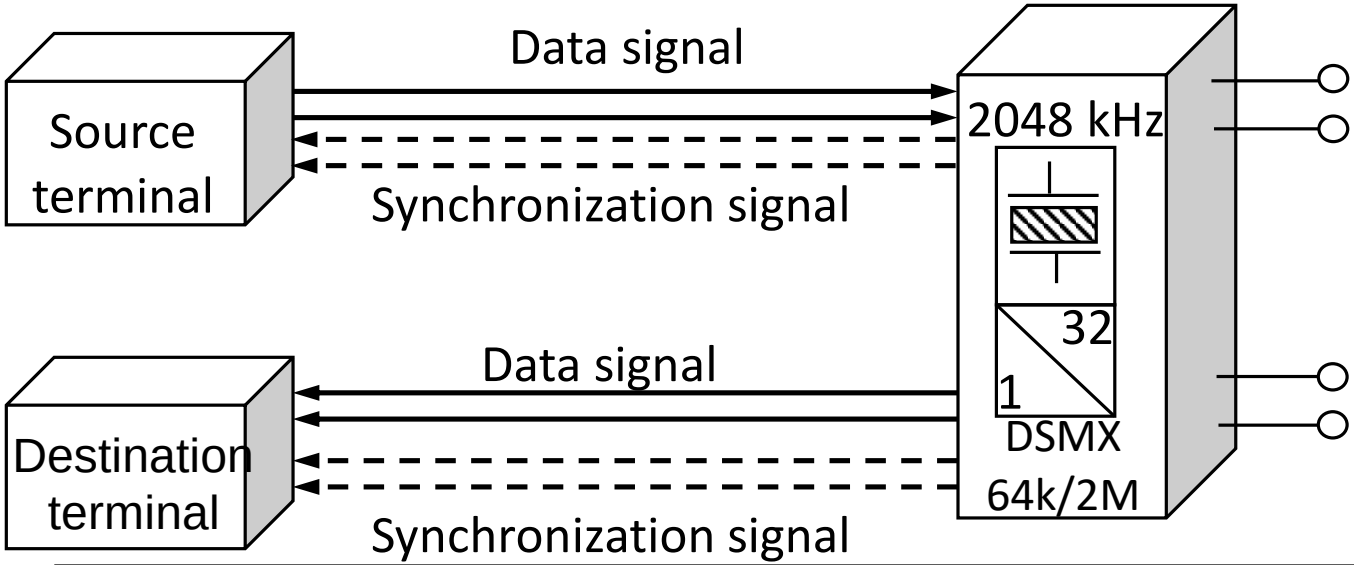

Terminal – multiplexer interface
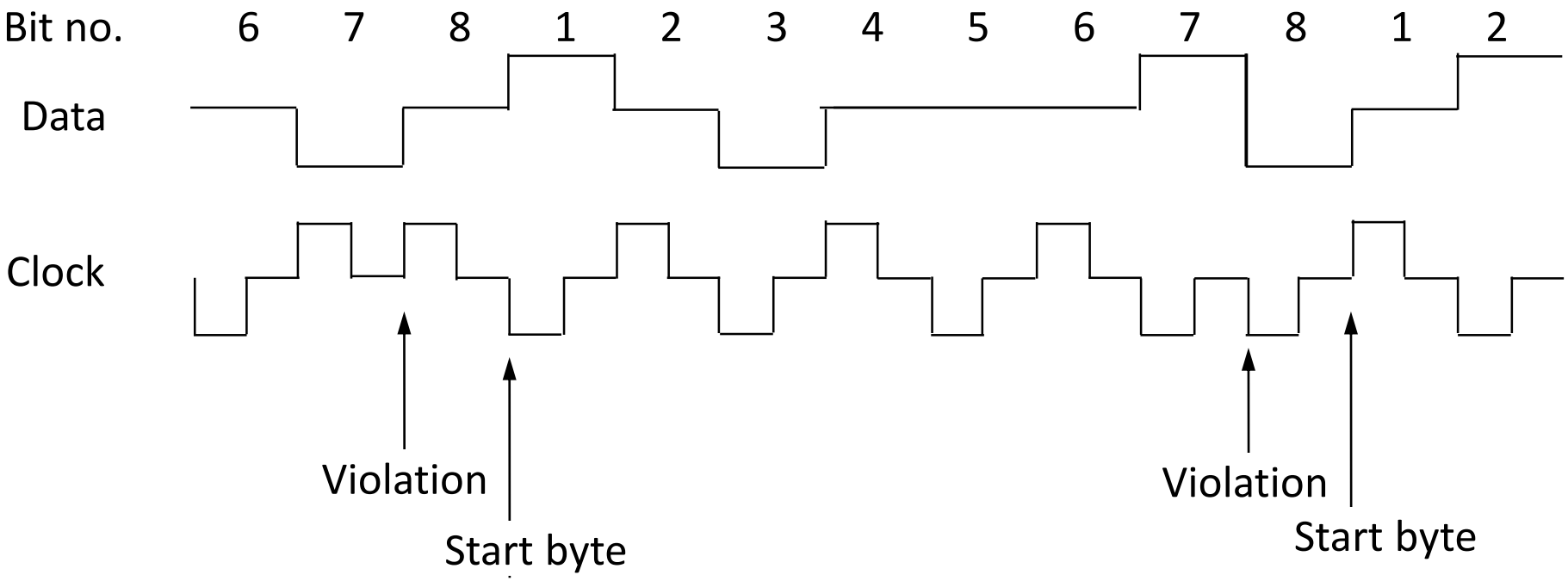
- Contradirectional interface – coding rule;
  - the clock signal transferred between the two equipment is transformed into a three level signal by alternating the polarity of consecutive nonzero impulses;
  - at the end of each byte (bit on position 8) is inserted a violation in the polarity alternation of the impulses;
    - it is achieved a byte level synchronization between the connected equipment.