Course 7
Narrow band ISDN. Access techniques. The echo in telephony.

Zsolt Polgar

Communications Department
Faculty of Electronics and Telecommunications,
Technical University of Cluj-Napoca

Content of the course

- Echo control methods;
  - The echo in telephony;
  - Echo control techniques.
- The principles of ISDN;
- Narrow band ISDN;
- The user – network interface:
  - The S and T reference points;
  - The U reference point;
- Two wire duplexing techniques;

The echo in telephony

- The origin of the echo in telephony;
  - The simplified schematic of a digital phone connection and the echo signals generated by reflected signal at the hybrid transformers;

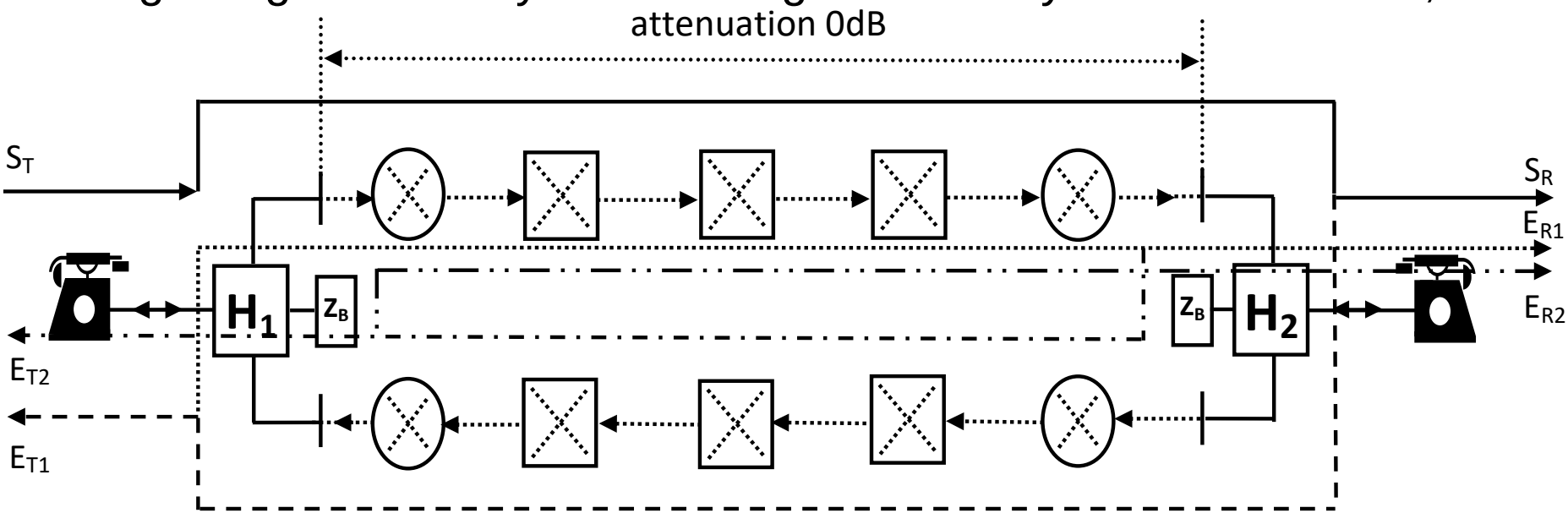

  - the transmitted signal S_T is transferred from the 2 wire channel, connecting the subscriber to the exchange, on the 4 wire channel by H_1;
  - the transformer H_2 achieves the transfer from the 4 wire channel on the 2 wire channel of the called subscriber;

The echo in telephony

- due to the impedance mismatches at hybrid transformers H_1 and H_2 reflected signals appear and echo is generated:
  - E_{T1} and E_{T2} at the transmission side;
  - E_{R1} and E_{R2} at reception side.
- the most important echo signals are generated by the first reflections:
  - echo signals E_{T1} at transmission side and E_{R1} at reception side;
  - these signals have higher levels because they propagate through the 4 wire loop less time;
  - the echo signals generated by multiple reflections have smaller levels but they can be important because they have larger delay.

- There are two types of echo, namely:
  - the echo at transmission side (ET) or the speaker (talker) echo:
    - is perceived by the person who is speaking as a delayed replica of his own signal;
    - it is due to the H_2 hybrid transformer located at the remote end;
    - the effect of this echo in telephony depends on the following parameters:
      - the level of the echo – depends on the attenuation of the whole echo propagation path;
      - the delay of the echo – depends on the circuit structure (length, no. of transit points, no. of exchanges);
      - this echo is more annoying if the (echo) level and the delay are large.

The echo in telephony

- the echo at the reception side (ER) or the listener echo:
  - is perceived by the person who listens;
  - it is due to unbalances at both hybrid transformers;
  - the listener echo is more annoying if the S/E ratio is small and the delay is large;
  - at small values of the echo delay (<3ms), the echo is perceived by the person who listens as a cave sound (hollowness) or barrel sound;
    - this effects appears when the unbalances are more pronounced at low frequencies;

- In the case of important unbalances the listener echo can go through the 4 wire loop several times;
  - multiple echoes are generated;
  - these echoes can be neglected at signal to echo ratios (S/E) higher than 8 dB.

- Particularities related to the echo in digital telephone networks:
  - the subscriber equipment has a relatively high influence on the generation of the echo:
    - the conversion from 2 wire transmission to 4 wire transmission takes place in the local exchange located relatively close to the subscriber;
    - due to the relatively low distance between the subscriber and the hybrid transformer the subscriber terminal input impedance has an important effect on the line input impedance (seen from the exchange);

The echo in telephony

- the echo attenuation on the 4 wire loop circuits is relatively low:
  - the transmission circuits insert a 0dB attenuation;
    - the loop attenuations are due to the hybrid transformers and partially to A/D and D/A converters;
    - in order to increase the attenuation of 4 wire circuits supplementary attenuators are inserted, which ensure the decrease of the echo signals level;
- the digital switching generates large delays of the transmitted signal:
  - the delays characteristic to digital switching are much larger than that of the analog switching;
  - these delays make the echo phenomenon more annoying and require the decrease of the echo level;
    - for ex. the propagation delays in one direction through a local and a transit digital exchange are 1,2ms and 0,45ms respectively;
    - it results a propagation delay in the entire loop of 3,3ms which is equivalent with the propagation delay on a 600km long analog connection.

The echo in telephony

- The instability of the transmission systems appears if conditions related to the gain and phase variation in the 4 wire loop are fulfilled;
  - the oscillation phenomenon appears at some frequencies where are fulfilled the conditions necessary for oscillation;
    - the phenomenon appears as a “whistle”;
  - the circuits tend to oscillate at frequencies located at the edge of the telephone band;
    - at these frequencies the unbalances of the hybrid transformers are more pronounced;
  - the instability makes the affected circuit unusable and can generate crosstalk in the neighbor circuits;

- Echo and stability performance of telephone circuits;
  - The echo tolerance of telephone transmissions must be considered separately for the transmission echo and the reception echo;
  - The voice and data transmissions must be considered separately ;
    - in data transmission the transmitter echo has practically no effects due to the separation of the transmission and reception paths achieved by the modem;
    - in voice transmissions the speaker echo is very annoying, the speaker hearing his own voice;

The echo in telephony

- Factors which establish the echo tolerance to the transmitter echo:
  - the number of 2-4-2 loops which contribute to the echo generation;
  - the delays inserted by the previously mentioned loops;
  - total attenuation of the echo path (including the subscriber line);
  - echo tolerance obtained by laboratory tests:
    - the echo tolerance is calculated for different delays and echo attenuations;
    - it represents the percent of speakers which consider a transmission acceptable as quality for a given delay and attenuation inserted by the echo path;
      - the echo path attenuation associated to a given echo tolerance can be characterized by a mean value and a standard deviation;
- The receiver echo has a more reduced effect on voice transmissions;
  - the effects of this echo could be neglected if the open loop attenuation is larger then 8 – 10dB and the echo delay is smaller than 10ms;
  - in the case of smaller delays, 3-4ms, the so called cave sound could appear;
    - the voice signal is distorted similarly to the echo of a room.

The echo in telephony

- In the situation of data transmissions the effects of the receiver echo on the performance of these transmissions are very pronounced;
  - appears a channel frequency transfer characteristic with ripples;
    - both the attenuation and group delay characteristics present ripples;
  - the frequency transfer characteristic of a circuit affected by reception echo can be described by a filtering process;
    - the filter has the frequency transfer characteristic given by relation:
    - a_{ec} is the gain of the echo path;
    - τ_{ec} is the delay of the echo path.

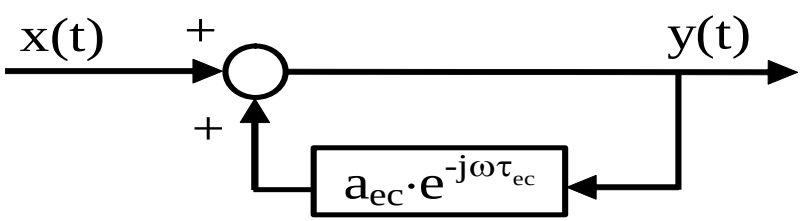

$$H_{echo-filter}(\omega) = \frac{Y(\omega)}{X(\omega)} = \frac{1}{1 - a_{ec} \cdot e^{-j\omega\tau_{ec}}}$$

$$X(\omega) = \text{Fourier}(x(t)) \quad ; \quad Y(\omega) = \text{Fourier}(y(t))$$

$$\left|H_{echo-filter}(\omega)\right|^2 = \frac{1}{1 + a_{ec}^2 - 2 \cdot a_{ec} \cdot \cos(\omega \cdot \tau_{ec})}$$

The echo in telephony

- Ex.: the transfer function of a circuit affected by echo;
  - echo delay = 1ms;
  - echo path attenuation: 5 and respectively 2:
    - echo path gain: 0.2 and respectively 0.5.

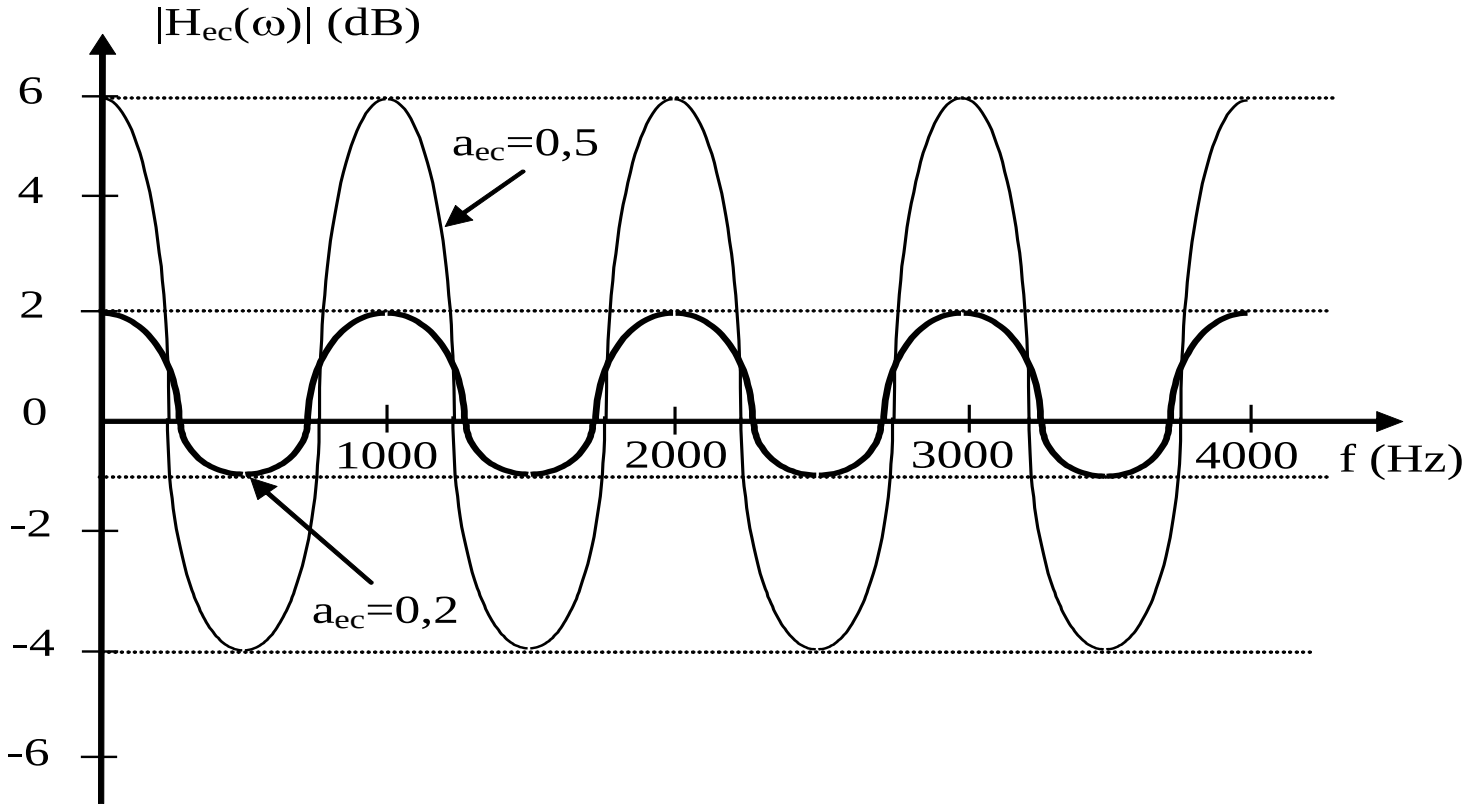

The echo in telephony

- Stability performance of the telephone circuits affected by echo:
  - Refers to two probabilities:
    - the oscillation probability of the circuits;
    - the probability to ensure a stability parameter for the circuits.
  - The stability of a 4 wire telephone circuit is defined as the maximum gain, S, which can be inserted in each transmission direction without losing the stability (without generating oscillations);

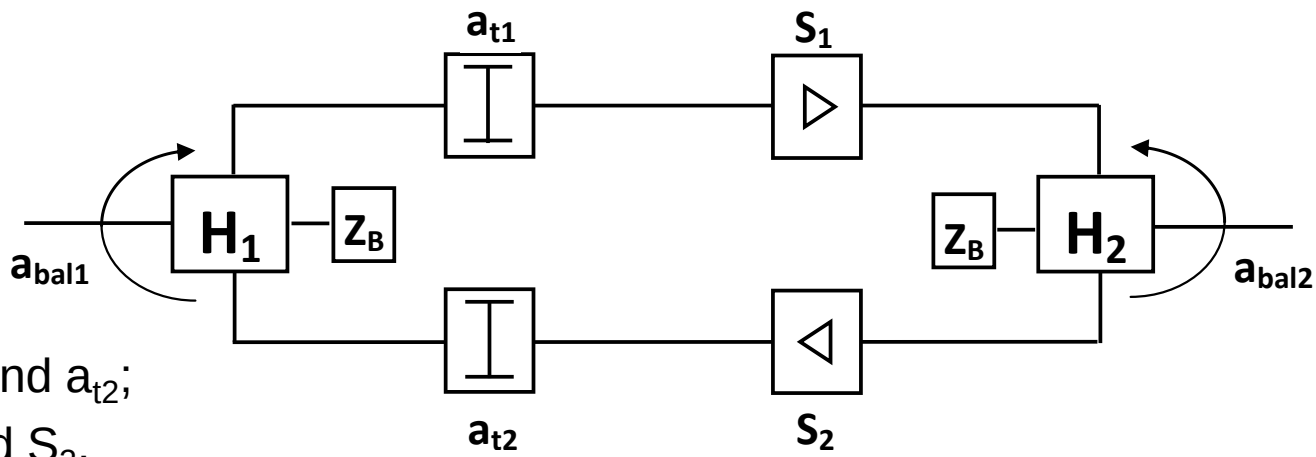

- attenuators: a_{t1} and a_{t2};
- amplifiers: S_1 and S_2.
- open loop attenuation (loss): $a_{open\text{-}l}$; $S_1 + S_2 \le a_{open-l} \rightarrow \text{if } S_1 = S_2 = S \Rightarrow S \le \frac{a_{open-l}}{2}$

Echo control methods

- Echo control by attenuation (see the previous slide);

$$a_{open-l} = a_{t1} + a_{t2} + a_{bal1} + a_{bal2}; S_1 = S_2 = 0$$

  - The safety margin to oscillation (whistling) depends directly on the open-loop attenuation;
  - An increase with 1dB of attenuations a_{t1} and a_{t2} means:
    - an increase with 2dB of the safety margin to oscillation;
    - the talker echo is supplementary attenuated with 2dB and the listener echo with 3dB;
  - If the received signal level has to be maintained constant an increase with 1dB of attenuations a_{t1} and a_{t2} induces:
    - 1dB attenuation of the talker echo and 2dB attenuation of the listener echo;
  - A better approach is a controlled increase of the attenuation;
    - the effect of the echo increases with the increase of the total (transmit-receive) delay on the connection;
      - attenuators are inserted as the length of the path increases;
      - the echo control by attenuation is an inadequate solution for large delays.

Echo control methods

- Echo suppressor;
  - This equipment inserts a high attenuation (even interruption) in a connection on one of the transmission directions;
    - the purpose is to insert a large attenuation in the opposite direction to the currently active voice path;
      - it is supposed that at a given moment the voice signal is transmitted only in a single direction;
    - the result is that the echo signal has a high attenuation;
    - an amplitude limitation is inserted during the time when both persons speak;
      - the telephone circuit could be even forced to function in half-duplex mode;
    - in the case of data transmissions the echo suppressor is deactivated with a signal transmitted by the modems (2100Hz guard tone);
      - it is ensured in this way a full-duplex transmission;
  - The most difficult problem is to chose a correct strategy for the double speaking periods;
    - when the propagation delay is high, it is difficult to detect and handle in an appropriate manner the double speaking;

Echo control methods

- The functioning principle of the echo suppressor;

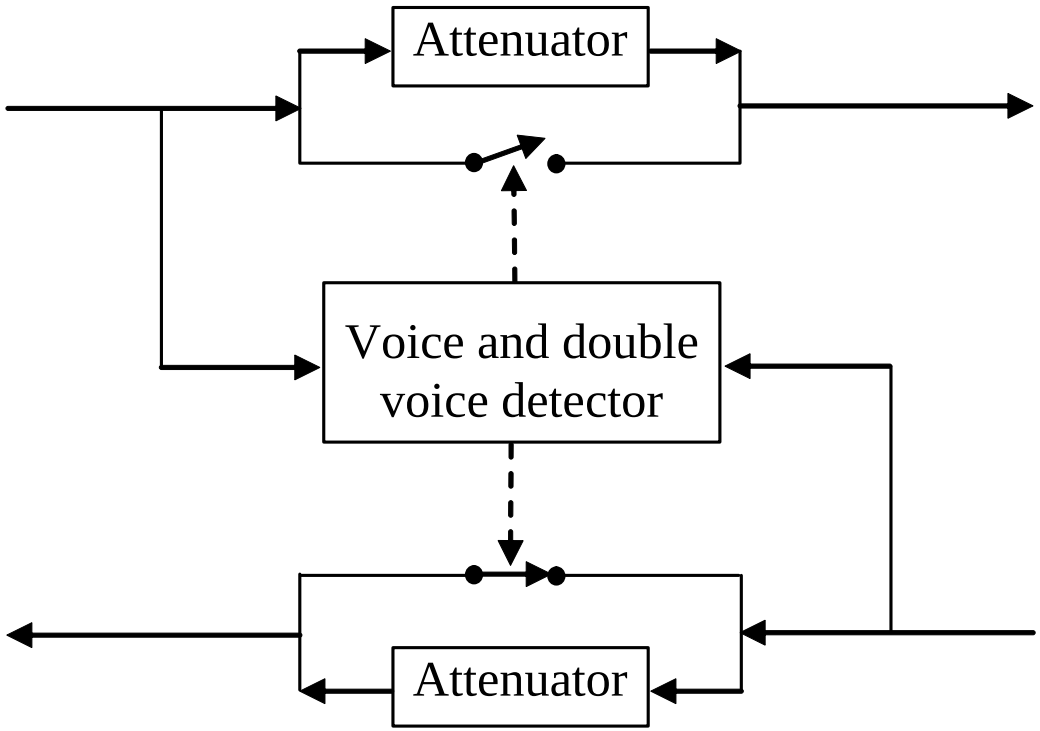

- It is not possible to cascade two echo suppressor;
  - it could appear a blocking of the circuits during the double speaking.

Echo control methods

- The echo compensator (echo canceller);
  - The functioning principle of the echo compensator;

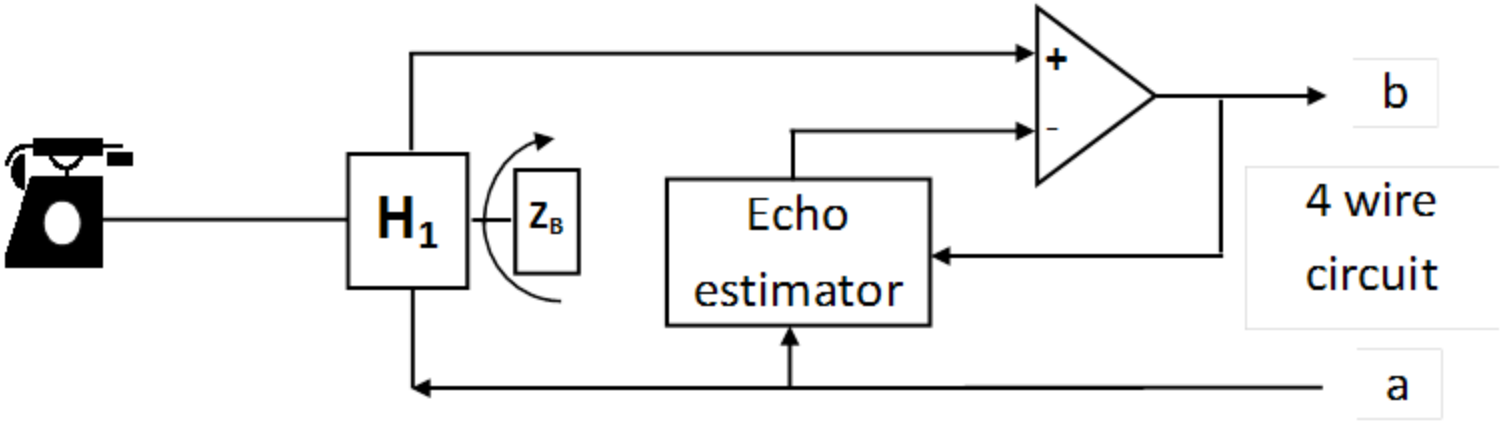

- the functioning of this circuit is based on the estimation of the echo path characteristics, from the input point (a), through the differential system and up to the output point (b);
  - this function is implemented by the so called echo estimator;
  - it generates a signal identical with the one created on the echo path;
  - the estimated signal is subtracted from the transmitted signal affected by the echo.

Echo control methods

- Block schematic and functioning of the echo compensator;

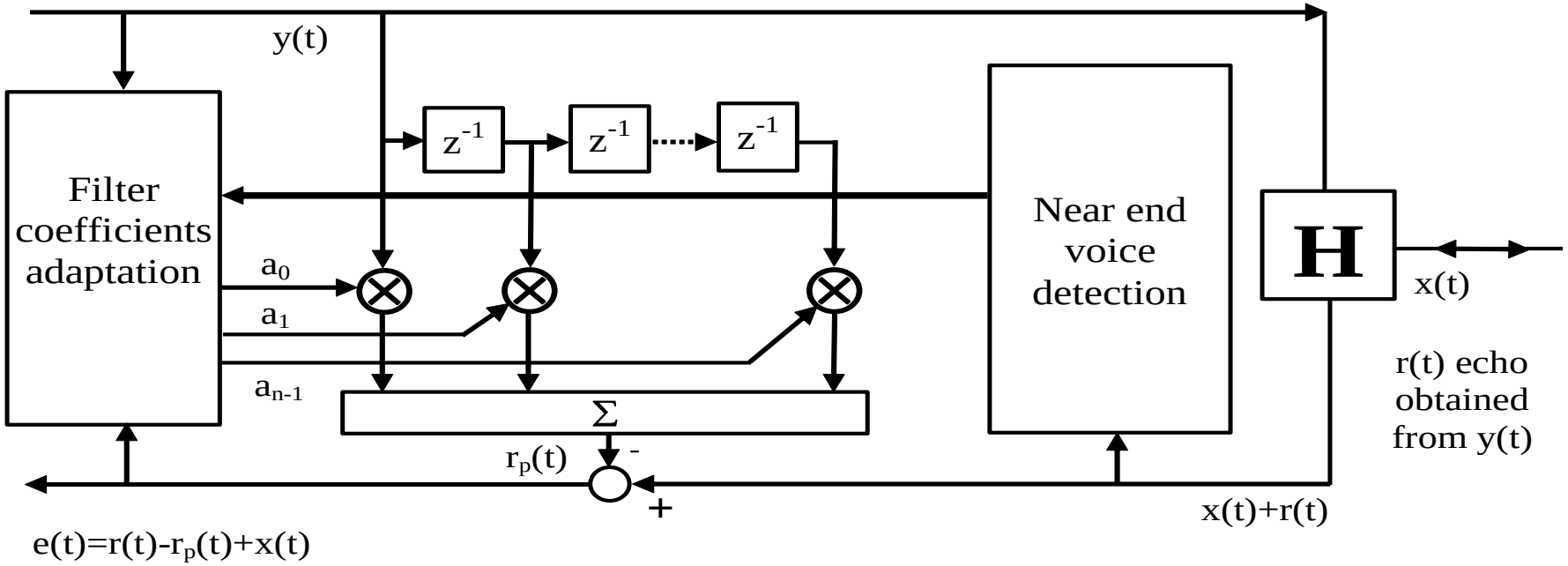

- the signal of the proximate speaker: x(t);
- the signal of the distant speaker: y(t);
  - it is the reference signal for the echo compensator;
  - it is used to generate a replica of the echo: $r_p(t)$;
    - this replica is subtracted from the speaker signal affected by the echo.
- the echo signal: r(t);

Echo control methods

- The echo replica, $r_p(t)$, is generated applying the reference signal to a digital transversal filter;
  - the filter's coefficients are adapted to the echo transfer function;
  - the compensator's coefficients are modified in such a way to decrease the error $e(t)=r(t)-r_p(t)$:
    - coefficient adaptation is possible only if $x(t)=0 \Rightarrow$ near end voice detection is necessary.

- Echo compensation in both directions;

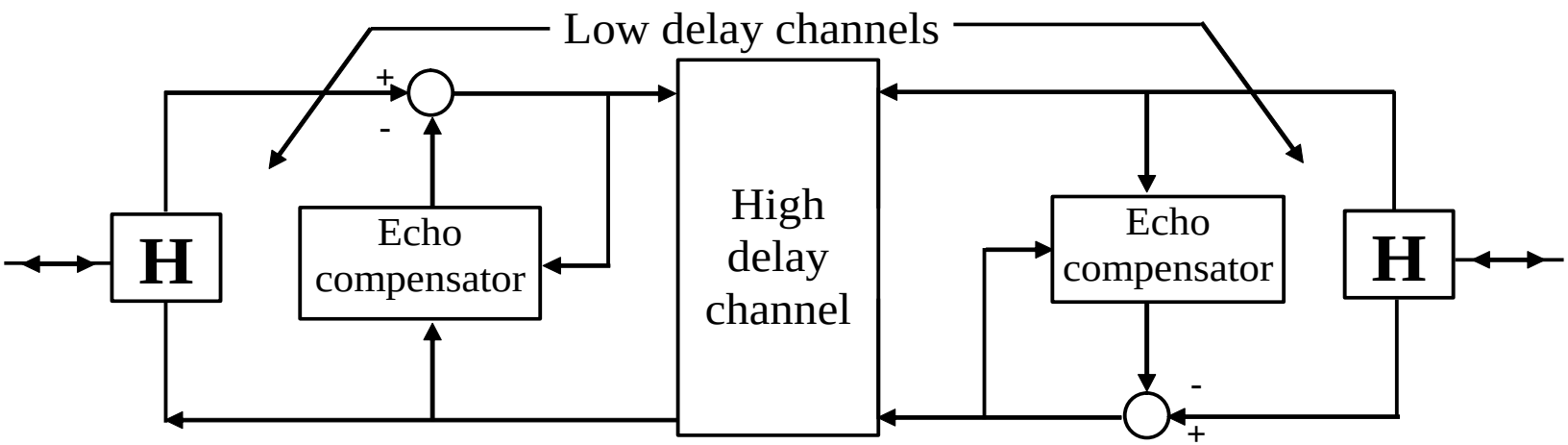

Echo control methods

- The echo compensation for a speaker is achieved at the other end of the connection;
  - it is desirable a two block configuration to ensure the same delay for echoes in both directions;
    - the number of coefficients of the echo compensator depends on the echo delay;
      - in the presented configuration the delay between the reference signal and the echo is minimum.
- The echo compensators are connected to the input/output of long distance channels;
  - for ex. channels used in international connections;
  - in a digital network the echo compensators could be connected to the input of the channels included in a PCM multiplex used in international or long distance connections;

Echo control methods

- Continuous time (analogue) echo compensator:

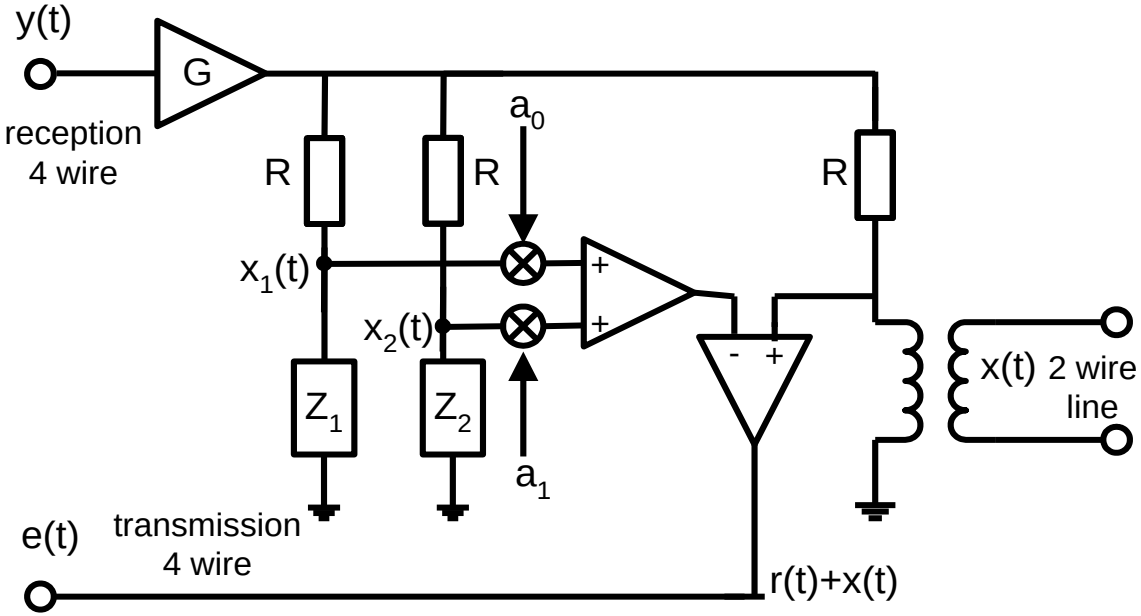

- it is the schematic of the electronic hybrid which includes two voltage dividers controlled by the error signal;
- it is a simple and low cost structure with only two degrees of freedom;
  - in voice applications can achieve a proper compensation of the echo;
- it can be used in digital transit exchanges which connect analog local exchanges or PBXs.

The ISDN principles

- Issues related to digital telephone networks (telephone IDN):
  - The circuit switching;
    - appropriate for voice transmission and volume date, but not appropriate for burst data;
  - The analog access of the subscribers in the network;
  - The access and transport network are designed for voice transmissions;
  - Coding techniques and circuit characteristics intended for voice transmissions;
    - non-uniform quantization, filter frequency characteristics;
  - Separate terminal equipments for voice and data transmissions;
    - separate equipment/network interfaces;

The ISDN principles

- Basic characteristics/principles of ISDN:
  - Voice and data applications using a limited set of standardized facilities;
    - defines the purpose of ISDN and the means necessary to realize it – *usage of a limited set of connection types and network interfaces with multiple uses.*
  - Ensures switched applications (circuit and packet switching) and non-switched applications (dedicated/leased lines);
  - It is based on 64kbps rate connections;
    - basic ISDN rate chosen due to the fact that is the basic rate in digital telephony.
  - Intelligent network:
    - ensures complex services besides simple circuit switching and a complex network management.
  - Protocols with a layered architecture:
    - the ISDN network protocols have a layered structure according to the OSI model; the access of a subscriber can vary according to the required service.

The ISDN principles

- Variable configurations;
  - there are possible several physical configurations for ISDN implementation.
- ISDN services (beside voice):
  - facsimile;
  - teletex (fast message exchange between terminals);
  - videotex (interactive services to information access);
    - these services are available at the rate of 64kbps (or at a lower rate).
- The user interface:
  - the user has access to ISDN through a generic digital channel („digital pipe”);
  - generic channels are available for different needs;
  - the rate between the user and the network is constant, but can be shared in different ways between different services;
    - control signals are necessary for time multiplexing of the data from different services;
    - control signals are multiplexed on the same digital channel;
    - the user pays according to the used capacity of the available channel.

The ISDN principles

- Benefits of ISDN:
  - flexibility and low prices;
  - the integrated voice and data don't require multiple transmission techniques.
    - The ISDN architecture;

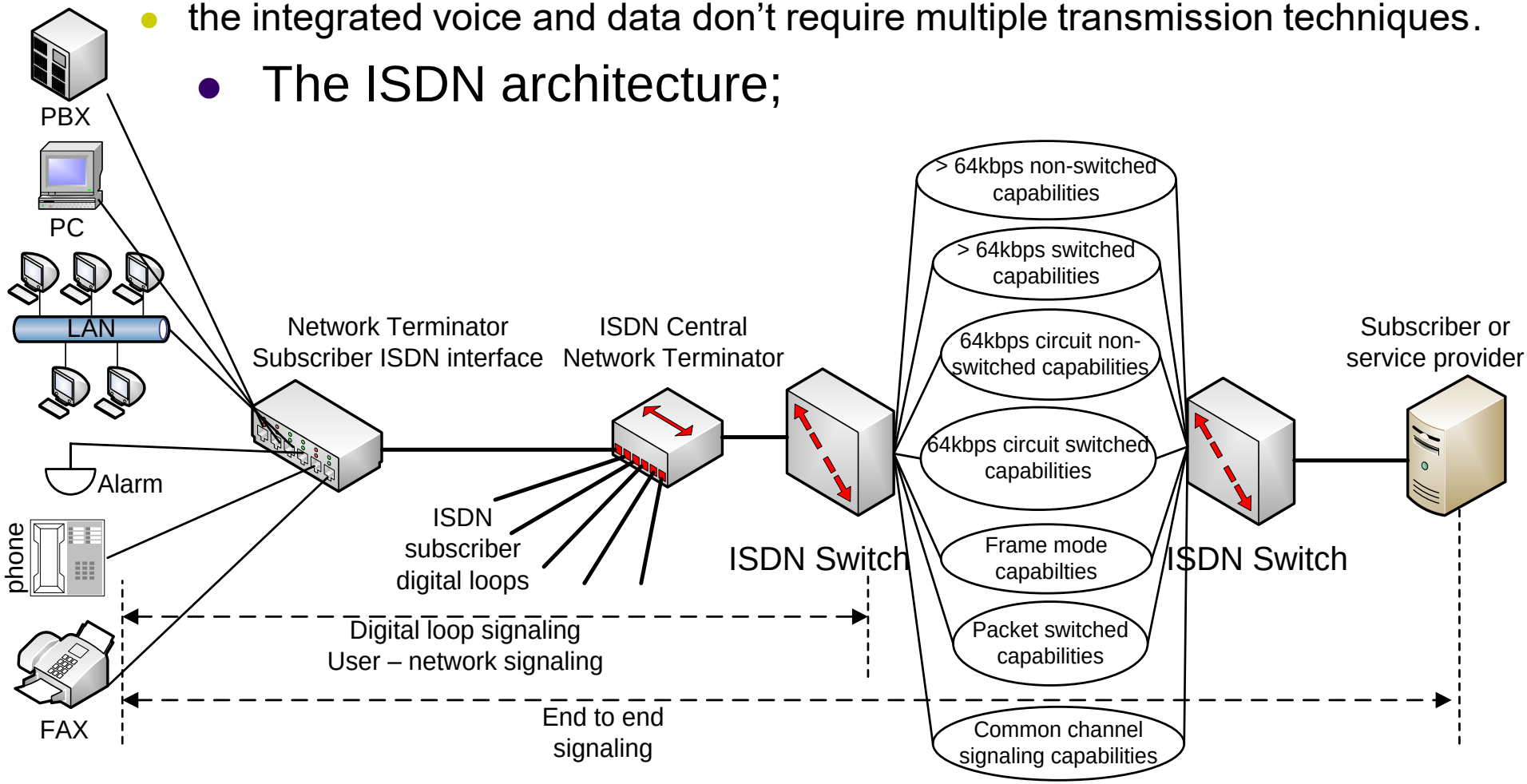

The ISDN principles

- The architecture of the access network:
  - The generic digital channel between the ISDN exchange and the subscriber has a number of channels having the following types:
    - B channel: 64kbps; used for:
      - digital data;
      - PCM coded voice;
      - a combination of traffic data at rates lower than 64kbps;
        - data (file) transfer at average rate;
        - facsimile;
        - video with low frame rate.
    - types of connection on channel B:
      - circuit switched type connections;
      - packet switched type connections;
      - semi-permanent connections.
    - D channel: rate 16 or 64kbps; used for:
      - control information (CCS) for circuit switching;
      - packet switched data;
      - telemetry data with low transfer rate and without signaling information.

The ISDN principles

- H channel: 384kbps (H_0), 1536kbps (H_{11}), 1920kbps (H_{12}); used for:
  - data at high transfer rates;
  - these channels are used as high speed channel or they are divided in time in several low speed channels.

- Access/service types;
  - Basic access:
    - intended for domestic users and for small offices;
    - the total rate (data + overhead) is:
      - 192kbps on the user terminal – network terminator connection;
      - 160kbps on the subscriber loop;
  - Primary access:
    - intended for high capacity users; for LAN and PBX;
    - the total rate (data + overhead) is:
      - 2048kbps – equivalent with the primary E1 PCM frame;
      - 1544kbps – equivalent with the primaryT1 PCM frame.

The ISDN principles

- ISDN access classes and the associated channels:

1. Basic access

Rate: 192 kbps
Structure: 2B + D at 16 kbps +synchronization;

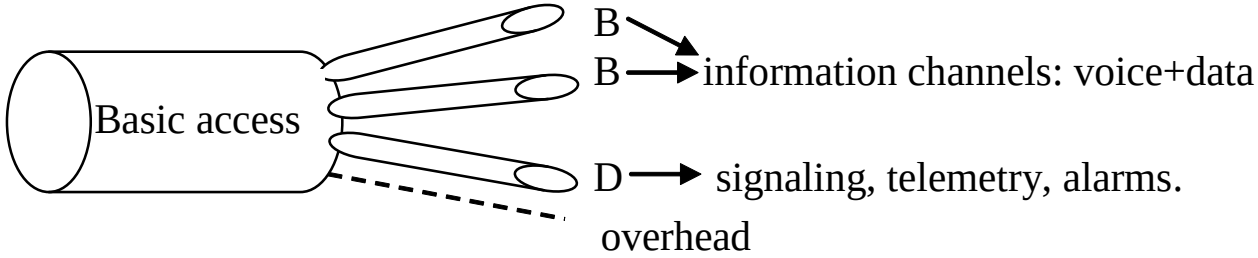

2. Primary access

Rate: 1544/2048 kbps
Structure: (2048kbps): 30B + 1D at 64 kbps;

Structure: (1544kbps): 23B + 1D at 64 kbps;

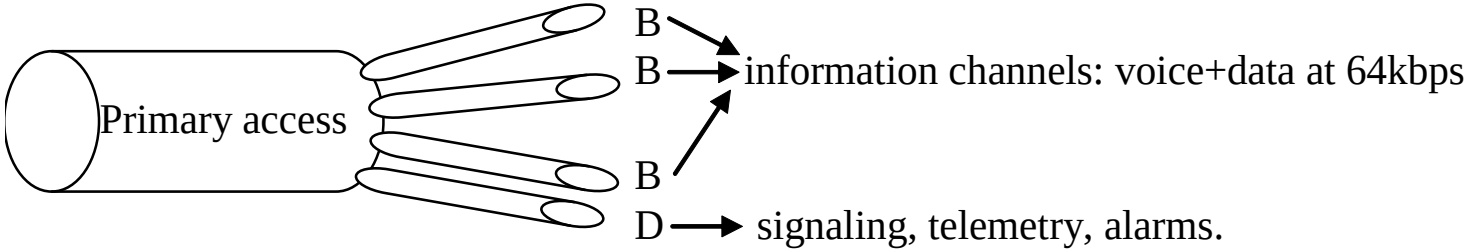

Narrow band ISDN

- Conceptual ISDN architecture;

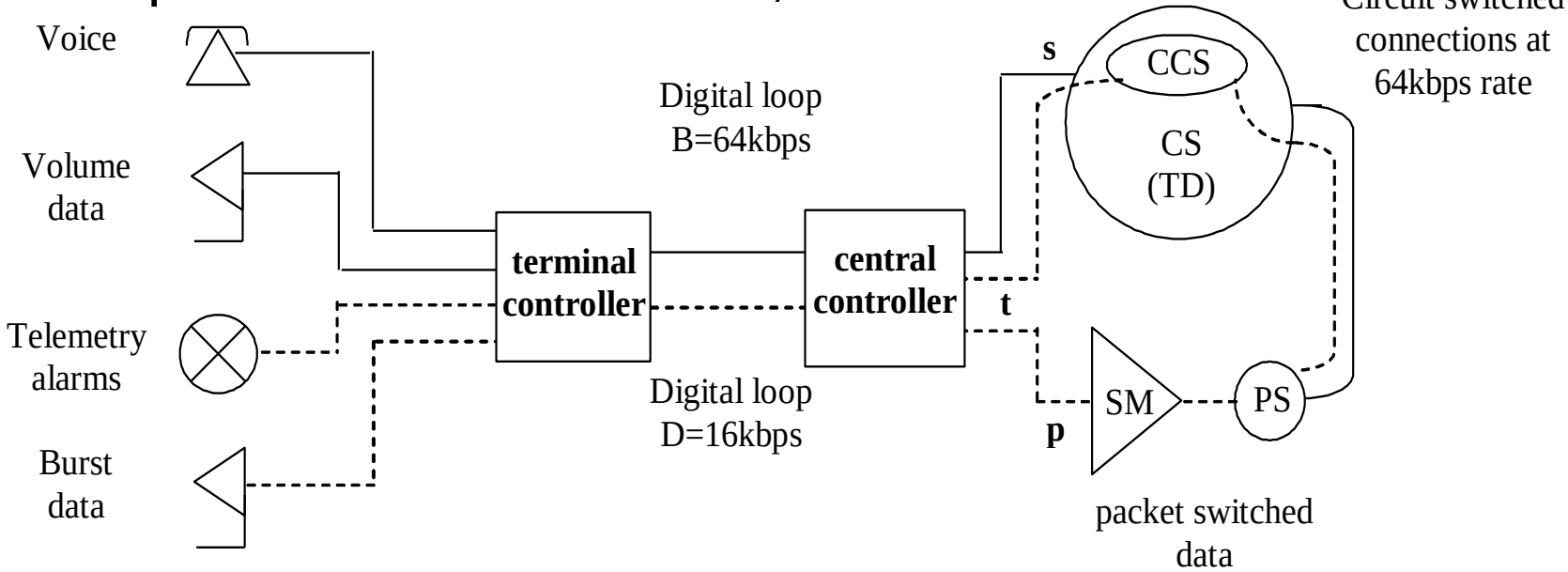

CS – circuit switching ; PS – packet switching ; SM – statistical multiplexer ; CCS – common channel signaling
CS (TD) – switching using time division

- This approach ensures a digital loop capacity for the two type of channels:
  - effective data channels – B channels;
  - control + data channels – D channels.

Narrow band ISDN

- The different information signals offered by the completely digital access are separated at the access units of the digital exchange (central controller);
  - The **B** channels and the associated signaling information **s** are routed to CS and CCS utilities;
  - The **p** information (packet switched information) is routed to PS facilities through a statistical multiplexer (SM);
    - the statistical multiplexer concentrates the virtual circuits to PS equipment;
  - The **t** information (telemetry) can be manipulated either by the CCS or by the PS facilities;
    - in the first case is handled as a datagram;
    - in the last case this information is transmitted on temporary or permanent virtual circuits.

User – network interface

- The user-network interface is defined by:
  - Functional groups:
    - represents a certain arrangement (combination) of the equipments;
  - Reference points:
    - represents conceptual separation points of the functional groups;
    - are defined using a structural model;
    - the equipments must match only the interfaces.
- ISDN functional groups and reference points:

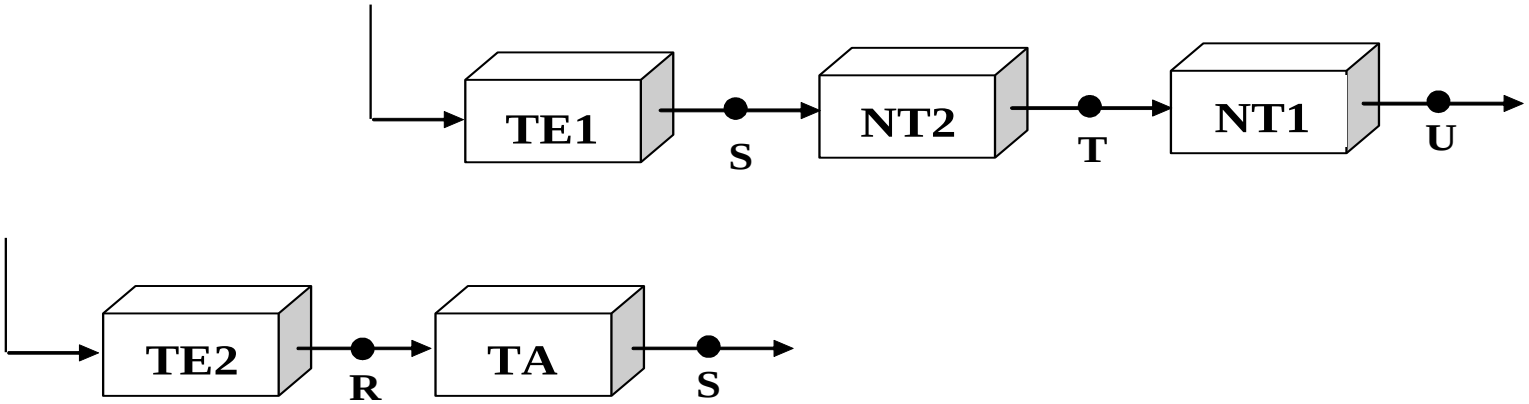

User – network interface

- The roles and the characteristics of the functional blocks and of the reference points are the following:
  - NT1 (Network Terminator 1) has the following functions:
    - effective connection to the digital loop;
    - multiplexing of the logical channels (for ex. 2B+D) using TDM.
  - NT2 (Network Terminator 2) has the following characteristics:
    - NT2 has switching functions;
    - can be a digital PBX, a terminal controller or a LAN.
  - TE1 (Terminal Equipment 1):
    - it is equipment with standard ISDN interfaces:
      - digital phone;
      - voice/data integrated terminal;
      - digital fax.
  - TE2 (Terminal Equipment 2):
    - it is a non-ISDN equipment (ex. RS-232 interface, X.25 interface);

User – network interface

- T reference point:
  - ISDN terminator at the user side;
  - separates the network equipments from the subscriber equipments.
- S reference point:
  - interface of the individual ISDN terminal;
  - separates the user terminal from the communication functions of the network.
- R reference point:
  - ensures a non-ISDN interface between a non-ISDN user equipment and an equipment (terminal) adaptor.
- U reference point:
  - describes the full-duplex data signal on the digital subscriber line.

- ISDN access configurations:
  - a) star architecture;
  - b) passive bus architecture;
  - c) active bus architecture;
  - d) active ring architecture.

User – network interface

- ISDN access configurations;

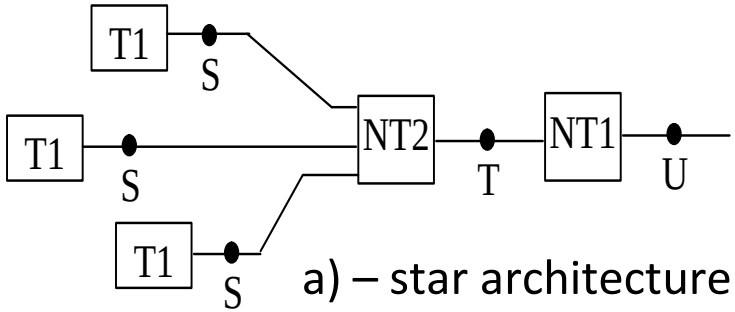

a) – star architecture

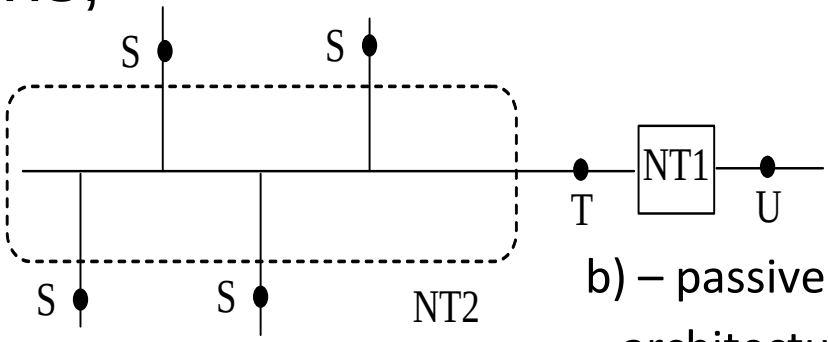

b) – passive bus architecture

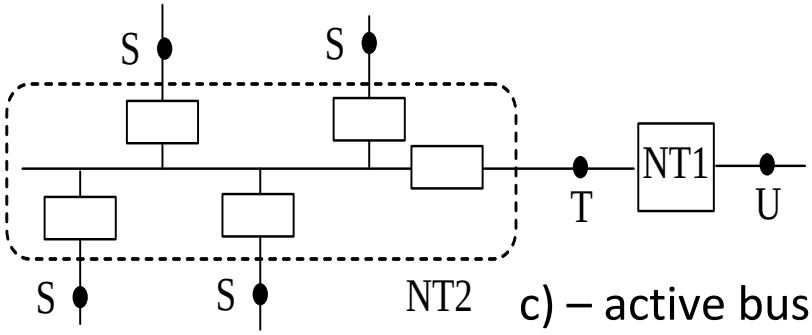

c) – active bus architecture

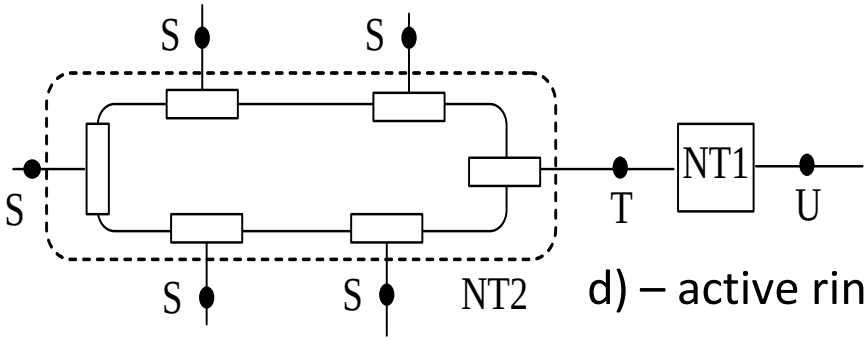

d) – active ring architecture

- The passive bus architecture is the most used one; characteristics:
  - maximum 8 TE1 terminals;
  - cable length 250-1000m pentru 1 TE1 and 150m for 8 TE1.

S & T reference points

- The basic user-network interface (the basic access);
  - The functions of the physical layer in points S and T:
    - coding of the digital signals;
    - full-duplex transmission on channels B and D;
    - multiplexing of the channels for the provisioning of the basic access;
    - activation-deactivation of the physical circuit;
    - power supply of the terminal equipment from the NT module;
    - terminal identification;
    - fault isolation;
    - multipoint access;
      - access control on channel D;
      - B channels are allocated to one user at a given time in an ordered mode;
      - D channel controls the access on B channels;
        - several terminals can try to access these channel in the same time;
        - a special protocol is necessary to solve the access conflicts.

S & T reference points

- Transmission and line coding at S and T interfaces:
  - full-duplex transmission on 4 wire;
  - pseudo-ternary coding (modified AMI): “1” no voltage, “0” negative or positive impulse – alternatively);
  - transfer rate 192kbps=2*64kbps+16kbps+overhead.
- Schematic of the connection between TE – NT;
  - It is provided a remote power supply of the terminal equipment from the network terminator NT;
    - it is used a phantom circuit over the transmission and reception data channels:
      - one of the channels “carries” the positive potential and the other channel “carries” the negative potential;
  - Is also possible the power supply of the terminal equipment from NT on a separate circuits or vice versa the power supply of NT from TE on a separate circuit.

S & T reference points

- Schematic of the connection between TE – NT;

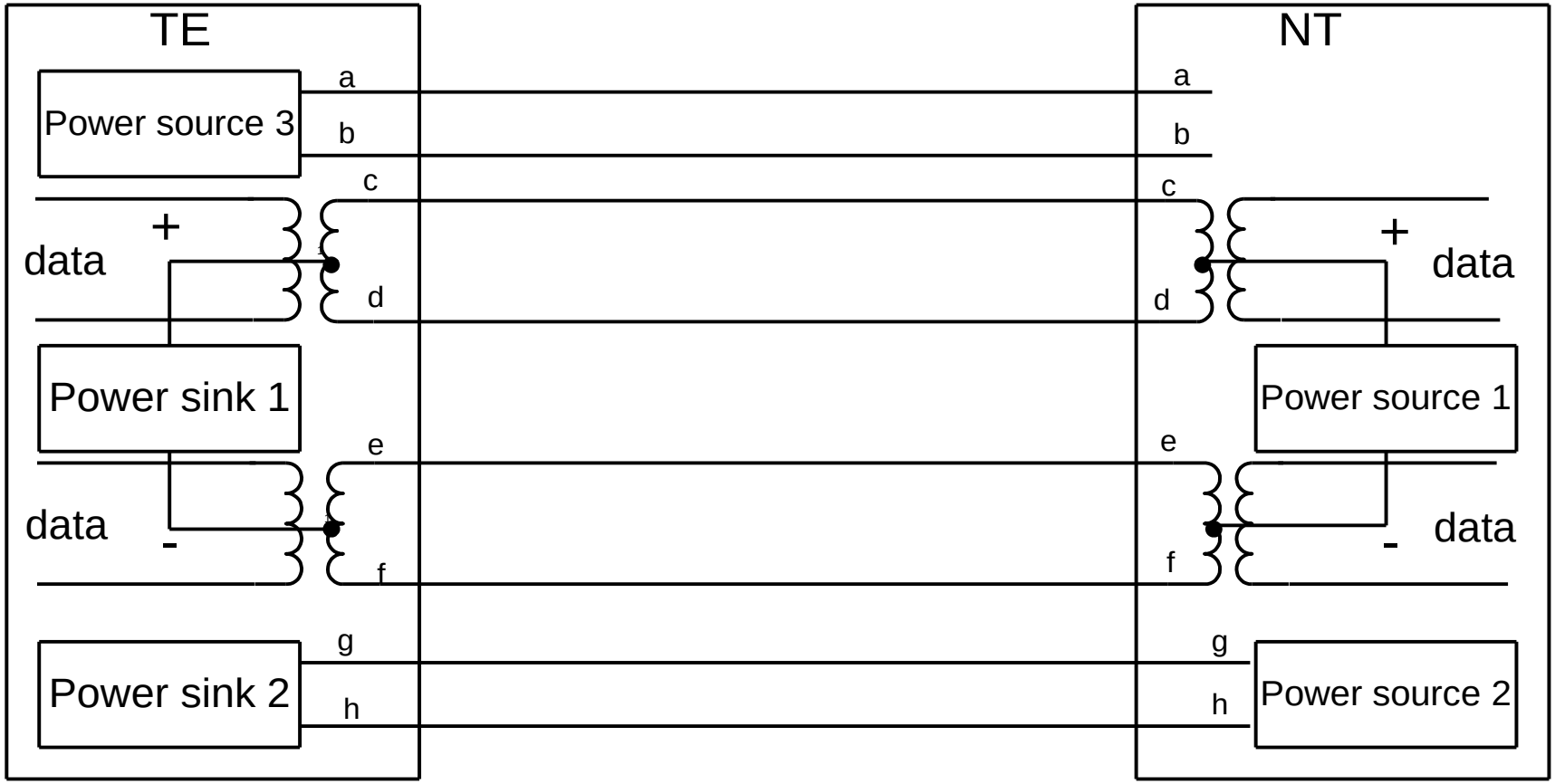

S & T reference points

- Multiplexing of the basic channels (2B+D) and the composition of the basic frames:
  - It is ensured the transmission of a 144kbps rate signal on a 192kbps rate channel;
    - the spare capacity is used for frame synchronization and D channel access control;
- Structure of the multiplex data frames at S and T interfaces:

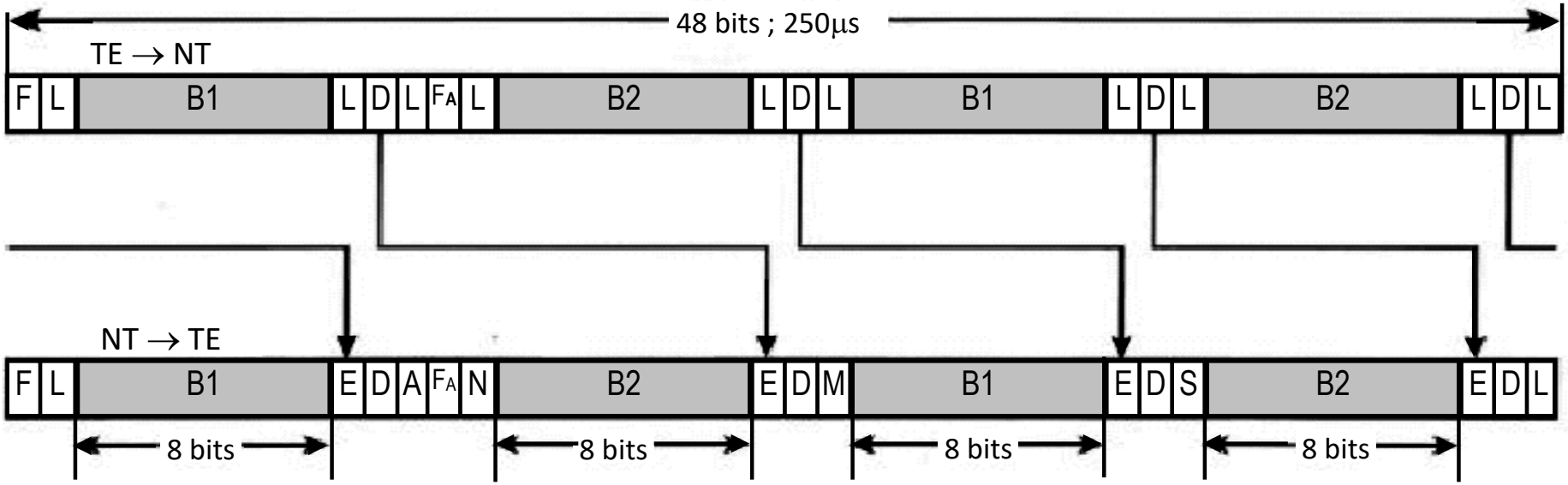

S & T reference points

- The significance of the bits of the frames from points S and T:
  - Frames of 48 bits having a duration of 250μs;
  - The frame from TE to NT is delayed with 2 bits;
    - the F-L bits synchronize the frame at the receiver end;
    - bit F_A is used as auxiliary synchronization bit;
    - N is a balance bit for F_A; N = F_A inverted;
    - bit A activates or deactivates TE;
    - bit M is used for the composition of multiframes;
    - S is reserved for subsequent standardizations;
    - F is always +0;
      - first zero bit after bit L inserts a violation of the pseudo-ternary coding rule (F and L are alternant);
    - bit L has the role of DC balancing;
    - bit E ensures the control of the access of several terminals to channel D;
    - B1,2 are the data bits of the B channels;
    - D is the data bit of the D channel.

U reference point

- Represents the interface between the subscriber equipments and the subscriber loop;
- The U interface composes frames of 240 bits and duration 1.5ms, the transfer rate being 160kbps;
- The structure of the frames is the following:
  - Synchronization word on 18 bits;
  - 12 groups of 18 bits with B and D channel data;
  - A 4kbps channel M for management and other purposes.
- The line codes used are the following:
  - 2B1Q (“2 Binary 1 Quaternary”) code:
    - a 4 level spectral efficient line code – quaternary code;
      - associates a symbol with 4 possible values to groups of 2 bits (quats) according to a coding rule.

U reference point

- The 4B3T ("4 Binary 3 Ternary") code:
  - associates to each group of 4 bits a group of 3 ternary symbols according to a given coding rule;
  - the coder has 4 states defined by a coding table:
    - the transition between states is controlled by groups of 4 transmitted bits;
    - to each group of 3 ternary symbols corresponds a unique group of 4 bits, which allows a simple decoding;
  - the code has some degree of redundancy which allows some protection against bit errors or detection of bit errors.
- The 2B1Q coding rule:

Bit 1	Bit 2	Simbol quat	Nivel tensiune
1	0	+3	2.5 V
1	1	+1	0.833 V
0	1	-1	-0.833 V
0	0	-3	-2.5 V

U reference point

- The 4B3T coding rule:

Coder state Bit group	S_1	S_2	S_3	S_4
0001	0 - + (1)	0 - + (2)	0 - + (3)	0 - + (4)
0111	- 0 + (1)	- 0 + (2)	- 0 + (3)	- 0 + (4)
0100	- + 0 (1)	- + 0 (2)	- + 0 (3)	- + 0 (4)
0010	+ - 0 (1)	+ - 0 (2)	+ - 0 (3)	+ - 0 (4)
1011	+ 0 – (1)	+ 0 – (2)	+ 0 – (3)	+ 0 – (4)
1110	0 + - (1)	0 + - (2)	0 + - (3)	0 + - (4)
1001	+ - + (2)	+ - + (3)	+ - + (4)	- - - (1)
0011	0 0 + (2)	0 0 + (3)	0 0 + (4)	- - 0 (2)
1101	0 + 0 (2)	0 + 0 (3)	0 + 0 (4)	- 0 0 (2)
1000	+ 0 0 (2)	+ 0 0 (3)	+ 0 0 (4)	0 - - (2)
0110	- + + (2)	- + + (3)	- - + (2)	- - + (3)
1010	+ + - (2)	+ + - (3)	+ - - (2)	+ - - (3)
1111	+ + 0 (3)	0 0 – (1)	0 0 – (2)	0 0 – (3)
0000	+ 0 + (3)	0 - 0 (1)	0 - 0 (2)	0 - 0 (3)
0101	0 + + (3)	- 0 0 (1)	- 0 0 (2)	- 0 0 (3)
1100	+ + +(4)	- + - (1)	- + - (2)	- + - (3)

U reference point

- The structure of the multiplex data frame at the U interface:

1,5ms

number of bits	18	216	6
number of quats	9	108	3
function	synch. word	12 groups of 2B+D	over-head
	SW/ISW	12 (2B+D)	M

	$b_{11}b_{12}$	$b_{13}b_{14}$	$b_{15}b_{16}$	$b_{17}b_{18}$	$b_{21}b_{22}$	$b_{23}b_{24}$	$b_{25}b_{26}$	$b_{27}b_{28}$	d_1d_2
number of bits	8				8				2
number of quats	4				4				1
channel	B_1				B_2				D

U reference point

- Superframe (multiframe) structure:
  - the superframe is composed of 8 frames with 48 M bits, which include a 12 bit CRC;

		Framing	2B+D	Overhead bits (M_1 – M_6)					
Quat positions		1-9	10-117	118	118	119	119	120	120
Bit positions		1-18	19-234	235	236	237	238	239	240
Superframe	Basic frame	Synch. word	2B+D	M_1	M_2	M_3	M_4	M_5	M_6
A	1	ISW	2B+D	eoc	eoc	eoc	act	1	1
A	2	SW	2B+D	eoc	eoc	eoc	dea	1	1
A	3	SW	2B+D	eoc	eoc	eoc	1	crc	crc
A	4	SW	2B+D	eoc	eoc	eoc	1	crc	crc
A	5	SW	2B+D	eoc	eoc	eoc	1	crc	crc
A	6	SW	2B+D	eoc	eoc	eoc	1	crc	crc
A	7	SW	2B+D	eoc	eoc	eoc	1	crc	crc
A	8	SW	2B+D	eoc	eoc	eoc	1	crc	crc
B, C, D	-	-	-	-	-	-	-	-	-

  - act: activation bit; dea: deactivation bit; eoc: embedded operational channel; crc: cyclic redundancy check;

U reference point

- Selection of the line codes:
  - Have to be considered the following issues:
    - power spectral distribution;
    - decoding complexity;
    - synchronization capability;
    - multiple access on channel D:
      - it is necessary a non-differential line code for the TE – NT communication.
- Comparison of the line codes spectrale properties:
  - Power spectral distribution of signals encoded with NRZ and 2B1Q codes:

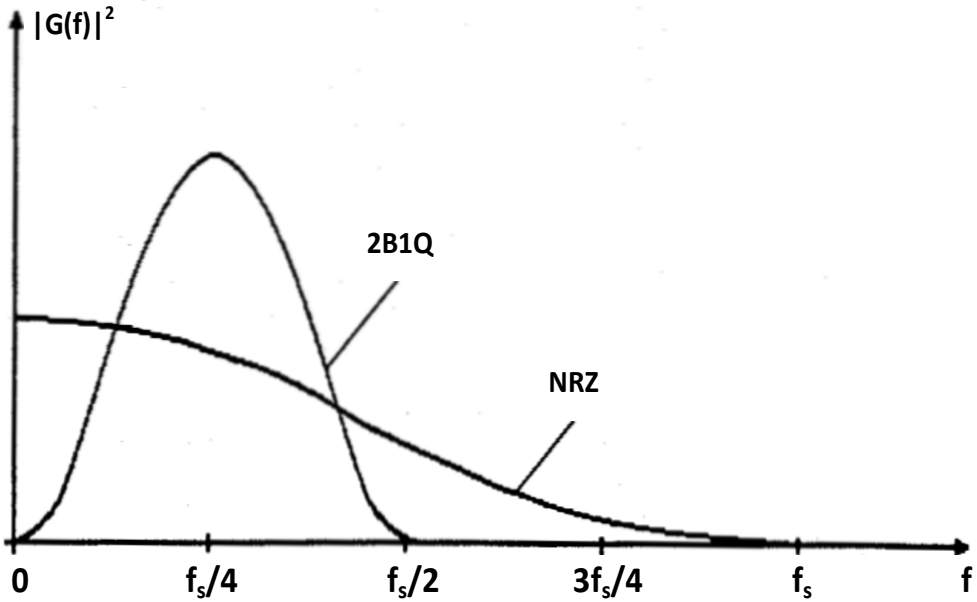

U reference point

- Power spectral distribution of signals encoded with 2B1Q, 4B3T and AMI codes:

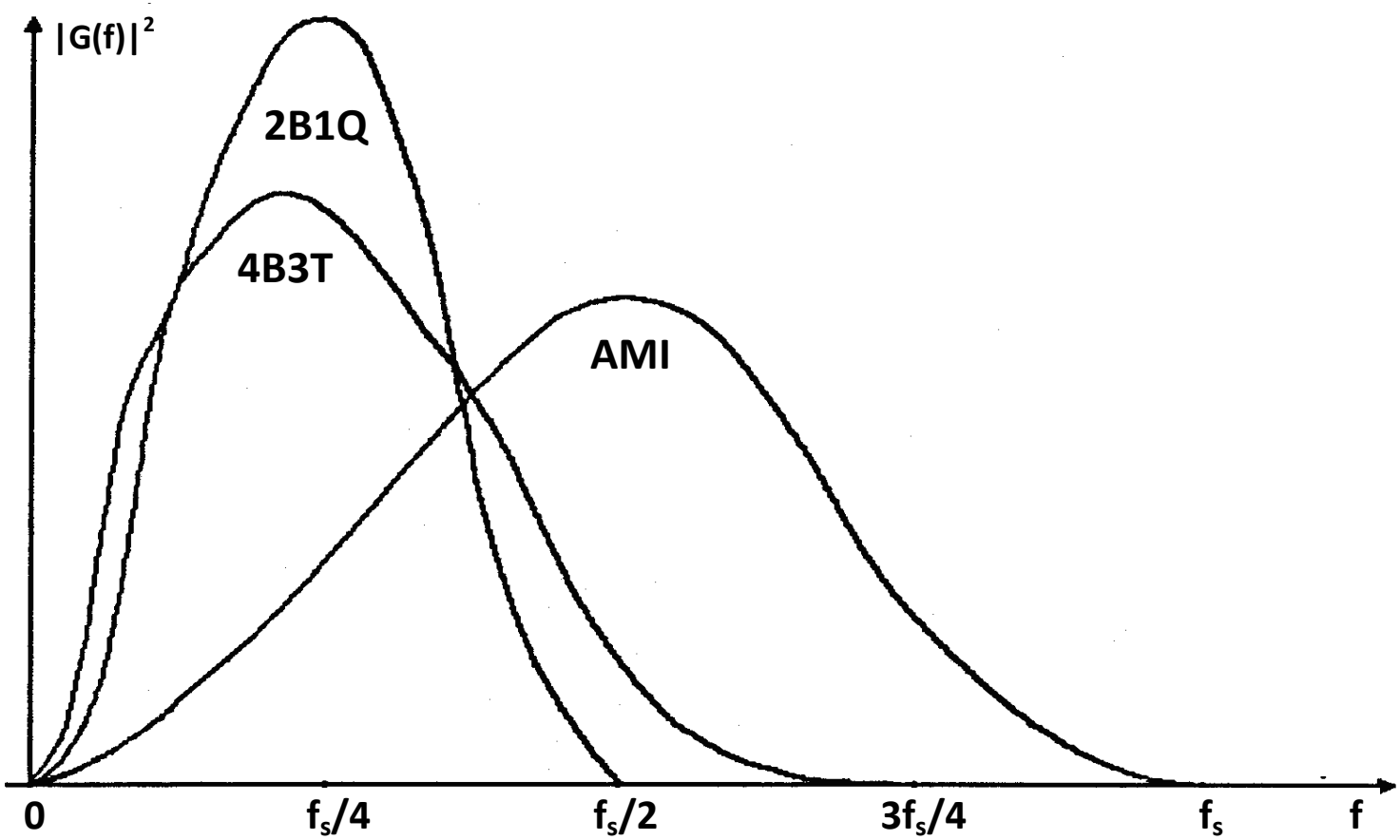

2 wire duplexing techniques

- The NT terminal ensures the conversion from 2 wire to 4 wire transmission and inversely from 4 wire to 2 wire;
  - There are two basic techniques namely:
    - the TCM (Time Compression Multiplexing) method – multiplexing with compression in time; transmission in burst mode or in “ping-pong” mode:
      - the multiplexing is achieved by dividing the bit sequence in each transmission direction in frames (burst) of de n bits;
      - the duration of the burst is Δ=n/D, where D is the user data speed;
      - each burst is transmitted with a speed D_0 at least twice the user speed D;
      - the relation between D_0 and D depends on the duration of the burst Δ, the transit time δ on a line with maximum length l_L and the guard time τ between the bursts;
    - the balancing method using hybrid transformer and echo canceller:
      - the method ensures the transfer of data in both directions at the user speed;
      - the hybrid ensures the directional separation and the echo cancellation improves the separation of the transmission paths;
      - compared with the TCM method it is ensured a decrease of the required bandwidth and are ensured non-accumulative delays in long access loops;
      - it is a more complex method.

2 wire duplexing techniques

- Block schematic of the transmission equipment used in conjunction with the TCM method of transmission path separation;

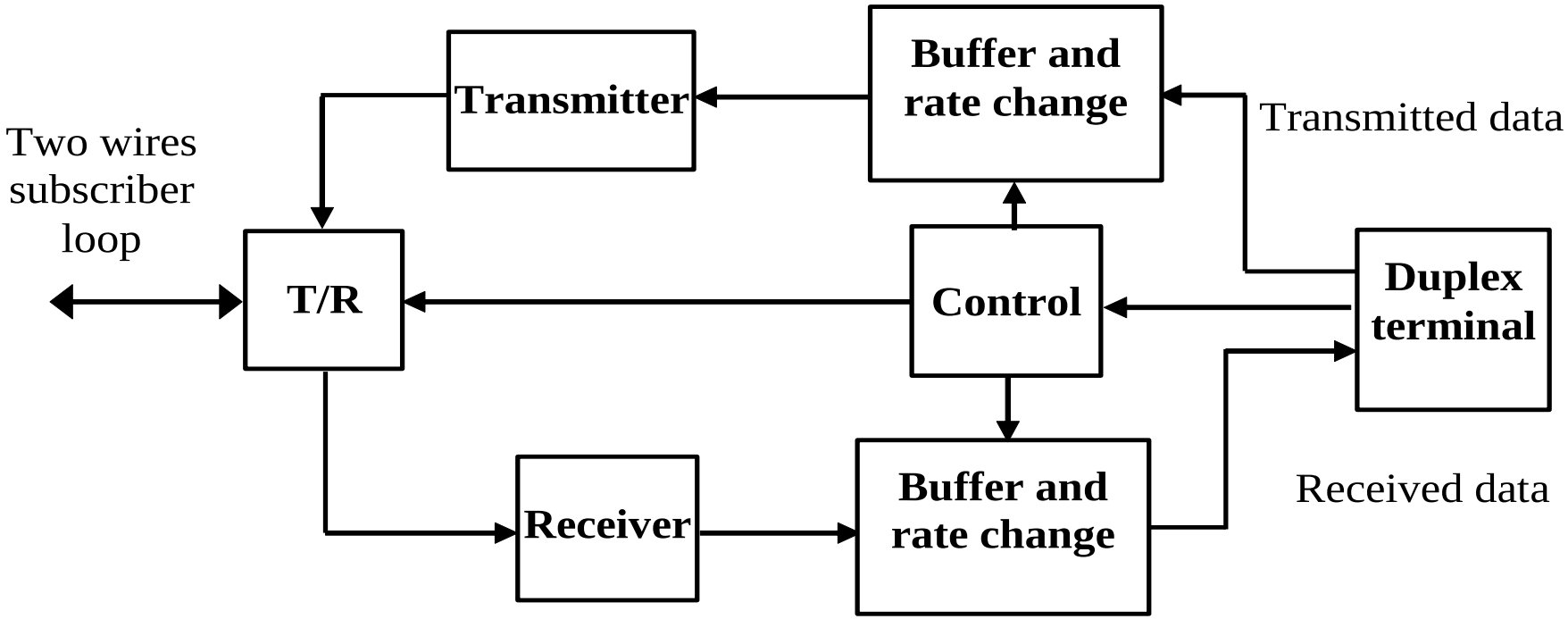

2 wire duplexing techniques

- Timing of the signals in the case of TCM type full-duplex transmission:

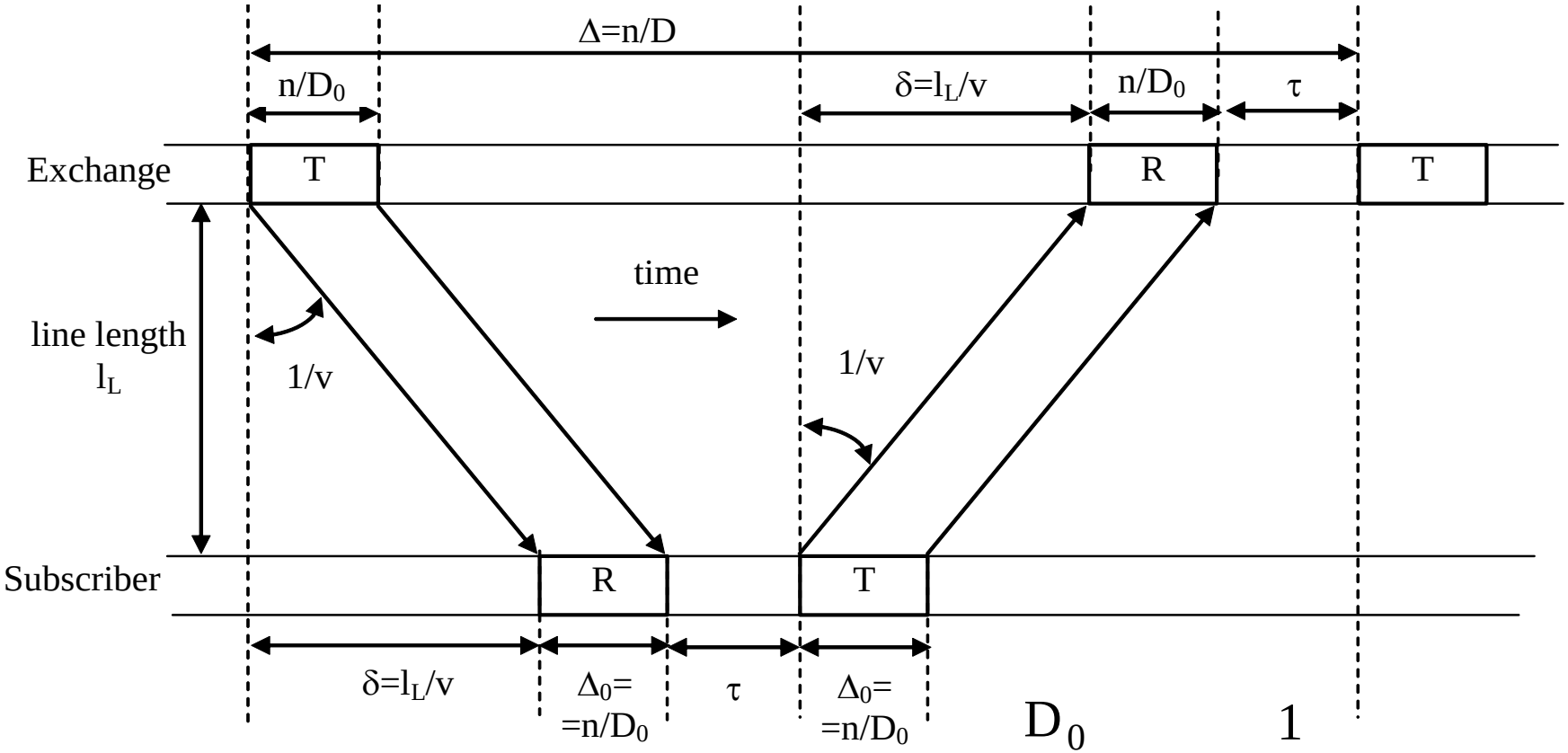

- The relation between rates D and D_0:

$$\frac{D_0}{2D} = \frac{1}{1 - \frac{2}{\Delta} \cdot (\tau + \delta)}$$

2 wire duplexing techniques

- Block schematic of the transmission equipment used in conjunction with the balancing method of transmission path separation;