Electrical Drives
and
Power Electronics
International Conference
Slovakia
24 – 26 September 2003

EXPERIMENTAL INVESTIGATION ON ROBUST CONTROL OF INDUCTION MOTOR USING H_∞ OUTPUT FEEDBACK CONTROLLER

Dénes Fodor[1], László Szalay[1], József Vass[1], Károly Bíró[2], Loránd Szabó[2]
[1] Faculty for Information Technology and Electrical Engineering
Department of Automation, University of Veszprém
H-8201 Veszprém, P.O.Box 158, Hungary, fodor@almos.vein.hu
[2] Technical University of Cluj, Dept. of Electrical Machines, 26-28 G.Bariţiu Str., Romania

Abstract. This paper deals with H_∞ controller design and real-time experimentation of the three phase induction motor control. The model of the motor was given in its state space representation in *d-q* reference frame. An H_∞ feedback controller was used in the speed loop, which was synthesized by combining a full information controller with an estimator to reach the desired results. Some model simplifications had been made, which was considered as modelling noise of the system. There are exogenous inputs considered as disturbances, which are not correlated with the measurement noise. The controller was synthesised to minimize the effects of the disturbances entering the plant and the influence of the measurement noise and modelling errors. The desired controller is given by a state space representation. The simulation of the system was performed by MATLAB/Simulink. The controller is realized as a Simulink embedded S-function, allowing good reference tracking. The real-time implementation of the proposed structure has been done on the dSPACE's DS1102 DSP development board, with very promising results, showing good reference tracking and good dynamical behaviour.

Keywords: Robust control, induction machines, vector control, modelling, estimation techniques, DSP (Digital Signal Processor)

1. INTRODUCTION

In the past few years the performance of computers has increased dramatically. With this increased performance it is possible to develop more complex control systems for real life applications. These new control methods are more robust and more reliable than the others are, because they can handle complex plant models. The H_∞ theory is a new method and only a few scientific papers with its application to induction motors can be found in the scientific literature [1]. The goal is to learn how to use the H_∞ controller in industrial environment. The three phase asynchronous motor is theoretically challenging widely used industrial drives; the main drawback is its difficult control possibility.

2. INDUCTION MOTOR MODEL

Tab. 1. lists the symbols used in this paper. Symbols representing vectors are underlined.

Tab. 1. List of the symbols

Meaning	Notation	Meaning	Notation
Control input	u, $u(t)$	Stator current (d, q)	i_{Sd}, i_{Sq}
Disturbances, noise	w, $w(t)$	Rotor speed	ω
Output	y, $y(t)$	Flux speed, angle	ω_{mR}, ε
Measurement	m, $m(t)$	Noise, reference	n, r
Stator voltage (d, q)	u_{Sd}, u_{Sq}	Leakage factor	σ
Magnetising current	i_{mR}	Rotor, stator time const.	T_R, T_S
Number of pole pairs	p	Inertia	J
Load torque	m_L	Rotor flux vector	Ψ_R

The dynamic behaviour of the induction motor is described by a set of nonlinear differential equations. Equations (1)÷(11) describe the behaviour of the AC motor in the rotating *d-q* reference frame [2]:

$$\frac{d}{dt}i_{Sd}(t)=\eta_1 i_{Sd}(t)-\eta_2 i_{mR}(t)+\omega_{mR}i_{Sq}(t)+\eta_3 u_{Sd}(t) \quad (1)$$

$$\frac{d}{dt}i_{mR}(t)=\frac{1}{T_R}i_{Sd}(t)-\frac{1}{T_R}i_{mR}(t) \quad (2)$$

$$\frac{d}{dt}i_{Sq}(t)=\eta_4 i_{Sq}(t)-\eta_5\omega_{mR}(t)\,i_{mR}(t)-\omega_{mR}(t)i_{Sd}(t)+\eta_3 u_{Sq}(t) \quad (3)$$

$$\frac{d}{dt}\omega(t)=\frac{2}{3}\frac{p^2}{J}(1-\sigma)L_S i_{mR}(t)i_{Sq}(t)-\frac{z_p}{J}m_L \quad (4)$$

$$\underline{i}_{mR}(t)=\frac{1}{L_H}\underline{\Psi}_R(t)e^{j\varepsilon(t)} \quad (5)$$

$$\omega=\omega_{mR}-\frac{i_{Sq}}{T_R i_{mR}} \quad (6)$$

$$\eta_1=-\frac{1}{\sigma T_S}-\frac{(1-\sigma)}{\sigma}\frac{1}{T_R} \quad (7)$$

$$\eta_2=-\frac{(1-\sigma)}{\sigma}\frac{1}{T_R} \quad (8)$$

$$\eta_3 = \frac{1}{\sigma L_S} \tag{9}$$

$$\eta_4 = -\frac{1}{\sigma T_S} \tag{10}$$

$$\eta_5 = -\frac{(1-\sigma)}{\sigma} \tag{11}$$

These equations result in a nonlinear, time-variant state space representation. For the controller synthesis constant flux is assumed during normal operation of the drive. From (5) comes that $i_{mR} = i_{mR}^{ref}$ is constant, and so $\frac{d}{dt} i_{mR}(t) = 0$ in (2). Then i_{Sd} is equal to i_{mR}, and so $\frac{d}{dt} i_{Sd}(t) = 0$. In this case (1) is not a differential equation, but an algebraic one. Substituting (6) into (3) and (4) and using $i_{mR} = i_{mR}^{ref}$ and $i_{Sd} = i_{mR}$ results in the following simplified state space representation of the AC drive:

$$\frac{d}{dt}\begin{bmatrix} i_{Sq} \\ \omega \end{bmatrix} = A\begin{bmatrix} i_{Sq} \\ \omega \end{bmatrix} + B_u\left[u_{Sq}\right] + B_w\begin{bmatrix} m_L \\ n \end{bmatrix} \tag{12}$$

$$A = \begin{bmatrix} -\frac{1}{\sigma T_S} - \frac{1-\sigma}{\sigma}\frac{1}{T_R} - \frac{1}{T_R} & -\frac{1-\sigma}{\sigma} i_{mR}^{ref} - i_{mR}^{ref} \\ \frac{2}{3}\frac{p^2}{J}(1-\sigma)L_S i_{mR}^{ref} & 0 \end{bmatrix} \tag{13}$$

$$B_u = \begin{bmatrix} \frac{1}{\sigma L_S} \\ 0 \end{bmatrix} \tag{14}$$

$$B_w = \begin{bmatrix} 0 & N_1 \\ -\frac{p}{J} & N_2 \end{bmatrix} \tag{15}$$

The load torque is assumed to be a disturbance. n is representing the disturbances due to the imprecise definition of the i_{mR}^{ref} parameter. Cross effects between the state variables, the general system noise and the unmodelled dynamics of the system are bounded and can be determined by taking the upper bound of the disturbances modulus. The model presented in (12) is the nominal plant, which will be used for the controller design. The controller will be applied to the original model (1)÷(11). This is the perturbed plant presented in Fig. 1.

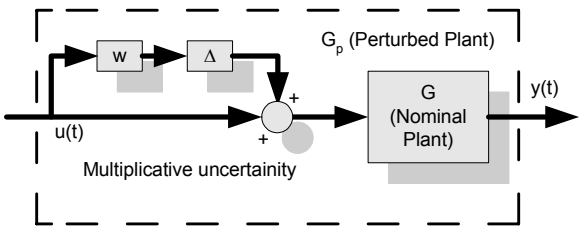

Fig. 1. Plant model used in controller design

The only input of the model (12) is the q component of the stator voltage.

3. THE H_∞ CONTROLLER DESIGN

The goal is to design an H_∞ controller for the three-phase asynchronous motor in the speed loop. The assumption is that there is noise entering the plant, so the estimator part of the controller was used, too. The plant is described in general case by the following equations [3], [4]:

$$\dot{x}(t) = Ax(t) + \left[B_u B_w\right]\begin{bmatrix} u(t) \\ w(t) \end{bmatrix} \tag{16}$$

$$\begin{bmatrix} m(t) \\ y(t) \end{bmatrix} = \begin{bmatrix} C_m \\ C_y \end{bmatrix} x(t) + \begin{bmatrix} 0 & D_{mw} \\ D_{yu} & 0 \end{bmatrix}\begin{bmatrix} u(t) \\ w(t) \end{bmatrix} \tag{17}$$

The following conditions need to be satisfied [5]:

- $D_{mw} B_w^T = 0$
- $D_{mw} D_{mw}^T = I$
- $D_{yu}^T C_y = 0$
- $D_{yu}^T D_{yu}^T = I$
- The plant is controllable from the control input and from the disturbance input
- The plant is observable from the measured output and from the reference output

When these requirements are satisfied a controller can be designed according to the general control configuration, shown in Fig. 2.

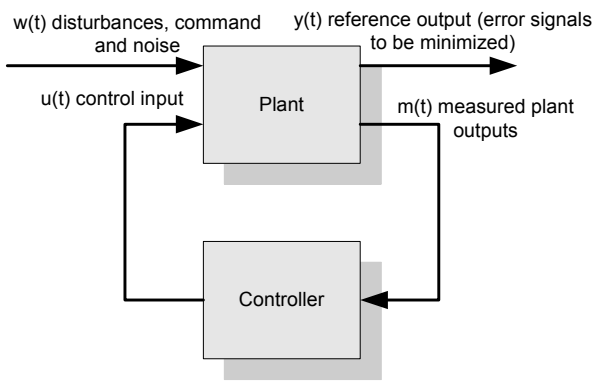

Fig. 2. General control configuration

The internal structure of the controller is shown in Fig. 3.

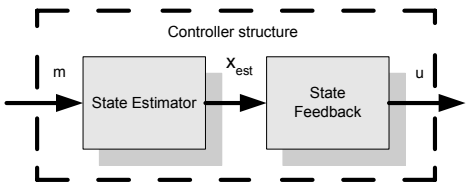

Fig. 3. Internal structure of the controller

The estimator part estimates the state; respectively the feedback part generates the control input. The solution of the finite-time steady state suboptimal H_∞ output control problem can be given by solving two Riccati equations. The suboptimal controller is defined according to (18); the matrices can be calculated using the solutions of the algebraic Riccati equations [3]:

$$\begin{aligned} \dot{x}_C(t) &= A_C(t)x_C(t) + B_C(t)m(t) \\ u(t) &= C_C(t)x_C(t) \end{aligned} \tag{18}$$

4. ADAPTATION OF THE MOTOR MODEL TO THE H_∞ CONTROL METHOD

The model presented in (12) is appropriate for the control synthesis. Good reference tracking is important in control theory. In order to guarantee this the speed-reference input is one of the disturbance inputs in (12). All coefficients of this input in the (12) are zero since the reference input has no direct influence on the equations of the motor. The output equations need to be formulated to have a representation as in (16) and (17). Note that since all parameters are fixed, the description is time-invariant. The measured value is the difference between the reference speed and the real speed together with the measurement noise. The reference output consists of the difference between reference and real speed (without noise), i_{Sd} and u_{Sq}. The controller should keep the control input finite and should not try to set it to zero, so the weight for the stator current and voltage in the reference output are kept small.

Note that the disturbance input is included in the reference output, which is not consistent with the H_∞ problem statement as in (16) and (17). This drawback can be solved by applying more general suboptimal control formula [6]. To make computations easier a steady state gain was used to design the controller. Some performance limitations have to be made [5] to guarantee good reference tracking (after the design ad hoc integral action was added [3]) and the output signals were bounded. The final model of the system used for the controller design is:

$$\frac{d}{dt}\begin{bmatrix} i_{Sq} \\ \omega \end{bmatrix} = A\begin{bmatrix} i_{Sq} \\ \omega \end{bmatrix} + B_u\left[u_{Sq}\right] + B_{wf}\begin{bmatrix} m_L \\ n \\ r \end{bmatrix} \tag{19}$$

$$\begin{bmatrix} m(t) \\ y(t) \end{bmatrix} = \begin{bmatrix} 0 & -1 \\ 0 & -1 \\ 0.01 & 0 \\ 0 & 0 \end{bmatrix}\begin{bmatrix} i_{Sq} \\ \omega \end{bmatrix} + \begin{bmatrix} 0 & 0 & 0 & 1 \\ 0 & 0 & 0 & 1 \\ 0 & 0 & 0 & 0 \\ 0.01 & 0 & 0 & 0 \end{bmatrix}\begin{bmatrix} u_{Sq} \\ m_L \\ n \\ r \end{bmatrix} \tag{20}$$

$$B_{wf} = \begin{bmatrix} 0 & N_1 & 0 \\ -\dfrac{p}{J} & N_2 & 0 \end{bmatrix} \tag{21}$$

After solving the Riccati equations the state space model of the controller is given in (18). The matrices of the controller A_C, B_C, C_C can be calculated using the solutions of the equations and the state matrices of the model. The performance bound required for the solution was chosen approximately 10% over the theoretical optimum.

5. SIMULATION RESULTS

The parameters of the induction machine used in the simulation are: L_s=0.13 H, L_h=0.12 H, L_r=0.13 H, R_r=3.0 Ω, R_s=1.86 Ω and p=2.

The simulation program was built up in MATLAB/Simulink. Its structure is given in Fig. 4.

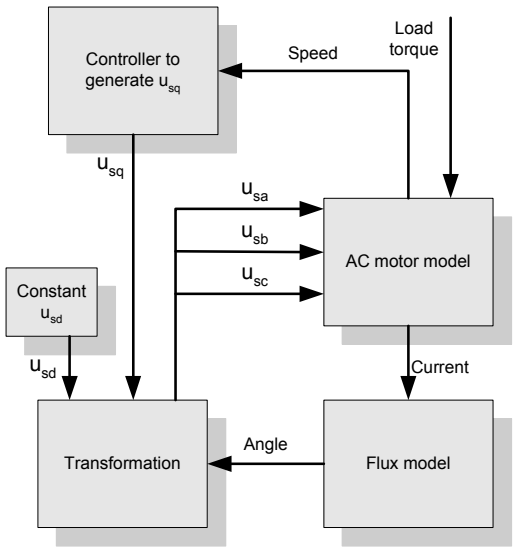

Fig. 4. The structure of the simulation model

The model representing the AC motor is a time-variant one according to equations (1)÷(11), not the simplistic model used for controller design. The inputs of the motor are the three phase stator voltages and the load torque. The controller supplies the value of u_{Sq}, while u_{Sd} is kept constant. The flux model given in Fig. 5 was applied.

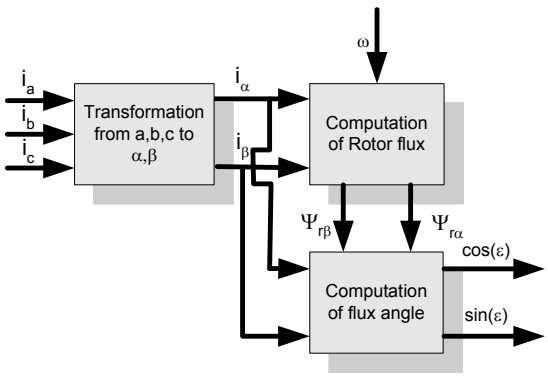

Fig. 5. Flux model used in the simulation

This model was used to obtain the angle of the rotor flux, which will allow the transformation of the voltages from *d-q* reference with inverse Park and inverse Clarke transformations to *a*, *b*, *c* three-phase components.

The simulated results are given in Figs. 6÷8. Fig. 6 shows the reference tracking capability even with large

measurement noise. The load torque is presented in Fig. 7. The simulation results show that the H_∞ controller works well, and the system with rapidly changing reference shows good dynamic behaviour.

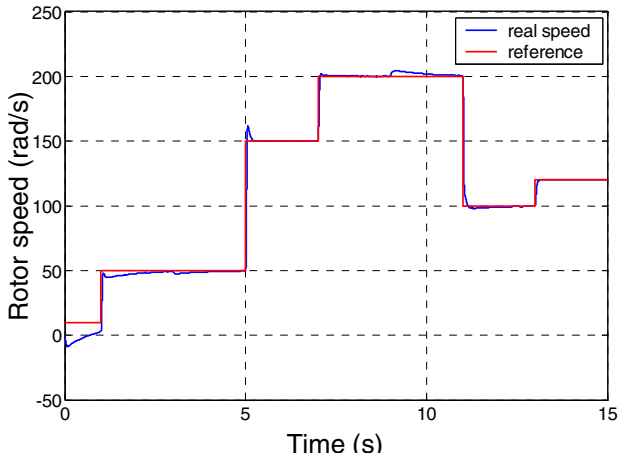

Fig. 6. Rotor speed

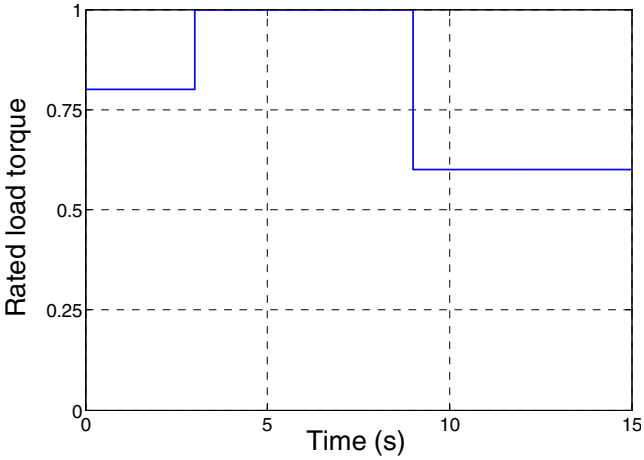

Fig. 7. Load torque [p.u.]

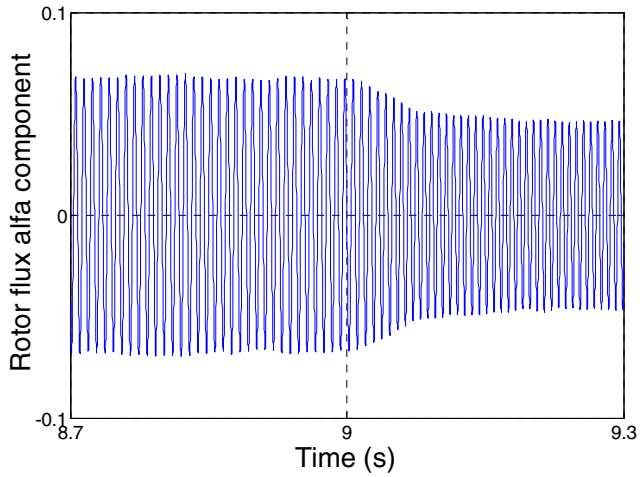

Fig. 8. Rotor flux α component [Wb]

The simulation results presented in Figs. 9÷10 show that the controller shows good results even when load torque is rapidly changing. Note that during controller design the load was considered as a disturbance. According to (4) it is influencing the rotor speed more than the measurement noise. Thanks to the robustness of the H_∞ controller the measurement errors and modelling errors are compensated.

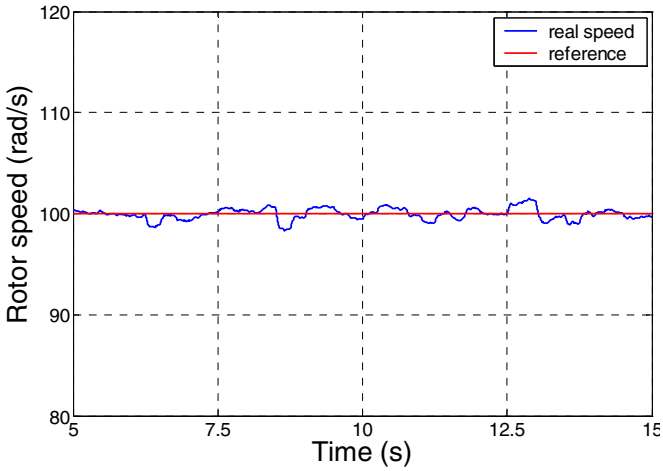

Fig. 9. Ref. tracking (100) during rapidly changing load

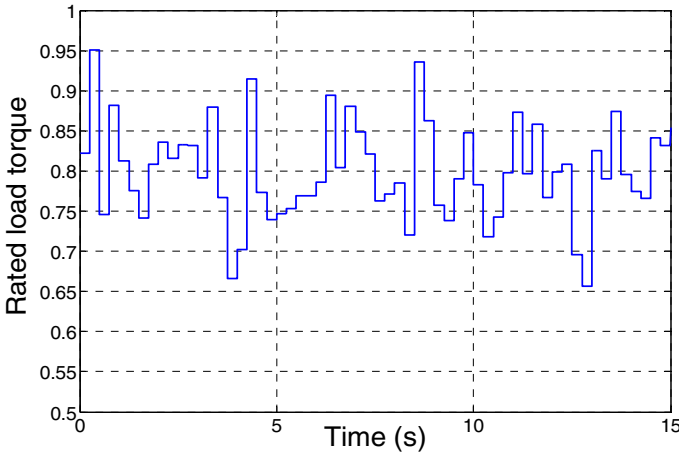

Fig. 10. Rapidly changing load [p.u.]

6. TESTING THE DYNAMIC BEHAVIOUR OF THE INDUCTION MOTOR

With the experiment setup based on the dSPACE DS1102 development board it is possible to study the dynamic behaviour of the motor in real-time.

Note that when the model is tested without controller, the power is supplied by three sine wave generators, where the amplitude and frequency values can be changed via a graphical user interface (GUI), Fig. 11.

The load torque can be also arbitrary changed. The values of the rotor flux, stator current and speed are displayed on the screen.

Robustness tests can be made by changing the position of the slide bar marking the value of the rotor resistance. By changing this value the parameters of the transfer functions are also changed, these are displayed numerically on the right side.

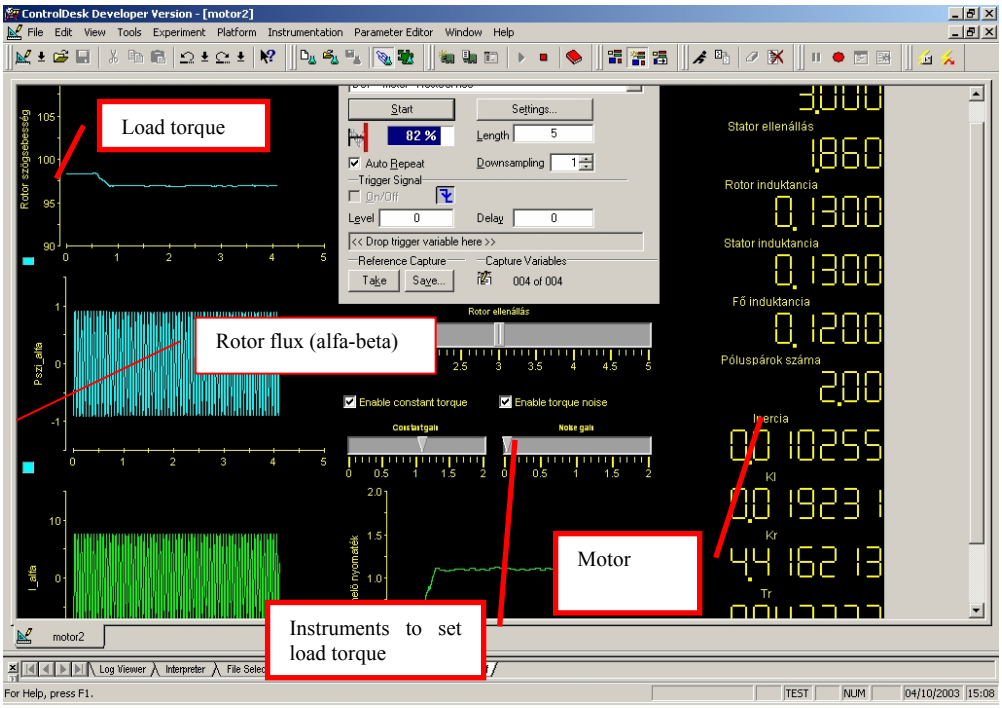

Fig. 11. GUI for testing the motor model

7. EXPERIMENTAL RESULTS ON THE DS1102

The DS1102 board (with TMS320C31 processor) is a PC card designed for development of high-speed multivariable digital controllers equipped with analog to digital and digital to analog converters.

The Controldesk software [7] provides the ability to manage the DSP board [8], different platforms and experiments. It also has a real-time interface (RTI) to MATLAB/Simulink and additional blocksets. With this interface the real-time code can be easily built, downloaded and executed. Instrument panels (also called layouts, presented later) can be easily made using Controldesk, allowing the change of parameters and real-time display of all variables, signals in the system. The main advantage of Controldesk is that the code, executable on the DSP, can be directly generated from the Simulink model of the system. This can be done in the way as follow.

The model of the system is built in Simulink using its original blocks (and using only the blocks that are fully supported by Controldesk) and blocks handling the board's hardware, such as in- and outputs, interrupts. As mentioned before there are blocks, which can not be used with RTI. These blocks must be replaced by combinations of other blocks before the code is generated. Using RTI several different settings are possible. The generated code can be single- or multitasking, block reduction can be switched on or off, signals can be reused and so on. Best results can be achieved when all parameters are *tunable*.

To do this it is necessary to replace transfer functions with parameter coefficients, such as 1/(Ts+1) for example, with a combination of blocks from integrators and gain blocks (see Fig. 12).

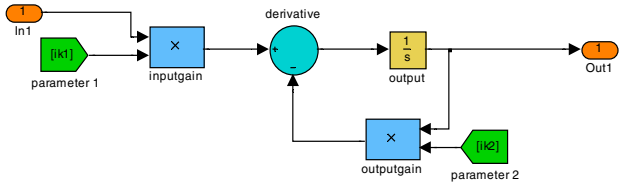

Fig. 12. Implementation of the transfer function

To be able to change the parameters on-line the parameters have to be masked (else they are not accessible from Controldesk during code execution). By modifying the parameters robustness tests become possible (by changing the induction motor's parameters and this way simulating parametric uncertainty). In this manner also it is possible to tune the controller and to give different input signals to the systems input. Using the GUI all the parameters can be easily tuned, values displayed or saved. First the controller is simulated with the mathematical model of the system built in Simulink.

In the second experiment the motor model is tested with the controller. Its design was presented in the section 3 of the paper. Fig. 13 shows the measured values when the real-time code is performed. In the top-left the reference and real speed values are shown (it can be stated out that the controller shows good tracking capabilities). The other displays indicate the value of the rotor flux, the tracking error and the load torque. There are two slide bars in the GUI. With the left slide bar the user can set the value of the load torque during code execution. The right slide bar can be used to set the magnetic operating point (the desired flux value) and so its effects on the control process can be tested. With this and other similar utilities of the GUI all the aspects and effects of parameter change can be studied in real-time.

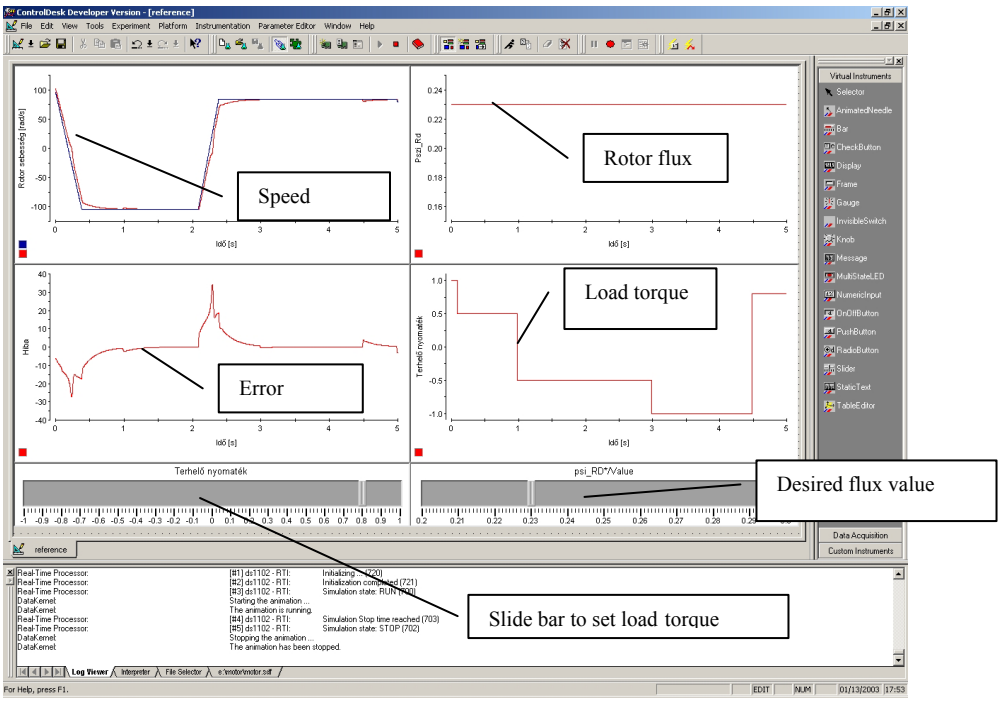

Fig. 13. Results displayed during real-time code execution

After obtaining good results the blocks representing the theoretical model of the induction motor are replaced by blocks representing the real induction motor (such blocks as inputs and outputs, interrupt handler blocks and so on). After the blocks are replaced, the system can be tested with the real induction motor.

8. CONCLUSIONS

According to the theoretical background presented in section 2 and 3, an H_∞ controller was designed by making some simplifications on the motor model. The controller's behaviour was tested with it. It was shown that all assumptions and simplifications made during the design process are valid.

The system showed good dynamic behaviour and it was seen how the performance (noise rejection, robustness, and tracking) depends on the design parameters. In consequence the controller can be implemented for real-time usage as shown in the last sections.

The controller can be further developed by taking more disturbances into account. Remark that actuator errors (resulting from the switching behaviour of the inverter) and modelling noise were not used in the controller design, and current measurements were assumed to be precise (it was assumed to measure them without noise).

The performance can be further improved by using a flux model, which is further developed so that it gives more precise values during transient processes, or by using a speed estimator [9]. Since the motor is nonlinear a parameter-variant or nonlinear controller can also be taken into account [10].

9. REFERENCES

[1] Rambault, L., Chaigne, C., Champenois, G., Cauet, S.: Linearization and H_∞ controller applied to an induction motor, EPE, 2001, Graz.

[2] Field Oriented Control of 3-Phase AC-Motor. Texas Instruments Europe, 1998.

[3] Burl, J.B.: Linear Optimal Control H_2 and H_∞ methods, Addison Wesley Longman Inc., 1999.

[4] Doyle, J.C., Glover, K., Khargonekar, P.P., Francis, B.A.: State-Space Solutions to Standard H_2 and H_∞ Control Problems, IEEE Trans. Automat. Contr., vol. 34, no. 8, August 1989.

[5] Skogestad ,S., Postlethwaite. I.: Multivariable Feedback Control Analysis and Design, John Wiley & Sons Ltd., 1996.

[6] Zhou, K., Doyle, J.C., Glover, K.: Robust and Optimal Control, Prentice-Hall, 1996.

[7] Controldesk Experiment Guide, dSPACE GmbH 2001.

[8] DS1102 User Guide, dSPACE GmbH, 2001.

[9] Brunsbach, B.-J., Henneberger, G.: Einsatz eines Kalman-Filters zum feldorientierten Betrieb einer Asynchronmaschine ohne mechanische Sensoren, Archiv für Elektrotechnik, 1990.

[10] Prempain, E., Postlethwaite, I., Benchaib, A.: A linear parameter variant H_∞ control design for an induction motor, Control Engineering Practice, 2002.

10. ACKNOWLEDGEMENTS

The authors gratefully acknowledge the support of Deutsche Akademische Austausch Dienst (DAAD). The researches were supported also by the Joint Hungarian - Romanian Intergovernmental S & T Cooperation Program under grant 13/2002.