Reconfigurable Fault Tolerant Control System for Switched Reluctance Motors

Loránd SZABÓ[1], Rareş TEREC[1], Mircea RUBA[1], Pavol RAFAJDUS[2]

[1]Technical University of Cluj-Napoca, Department of Electrical Machines and Drives
Memorandumului 28, 400114, Cluj-Napoca, Romania
[2]University of Žilina, Department of Power Electrical Systems
Univerzitna 1, 01026 Žilina, Slovak Republic
[1]Lorand.Szabo@emd.utcluj.ro; [2]pavol.rafajdus@kves.utc.sk

Abstract- **In the paper, a reconfigurable fault tolerant control system for a segmental stator switched reluctance machine is proposed. It can detect diverse winding faults and mask these faults by means of imposing increased currents in the healthy remained coils of the machine. The reconfiguration strategy depends on the type of the winding fault. By applying the proposed reconfiguration of the control strategy the continuation of the machine's movement can be assured despite of winding faults of diverse severity. The main hardware and software components of the control system are detailed in length in the paper. The correct reconfiguration is proved by laboratory measurements performed on a test bench specially built up for this purpose. The developed control system can be applied in safety-critical electrical equipment.**

Keywords- Switched Reluctance Machine; Fault Tolerance; Reconfigurable Control

I. INTRODUCTION

By definition, the fault tolerance is a fundamental characteristic of a system that ensures its continuous function even after a fault occurs, that would cause a normal similar system to malfunction [1].

In safety-critical systems faults can cause life losses, environmental degradation or significant financial losses. Hence the fault tolerant design of complex electrical systems is becoming nowadays a requirement for a growing number of companies, far beyond its traditional application areas, like aerospace, military, automotive, medical, etc. [2-4].

The switched reluctance machine (SRM) based electrical drive systems are ideal for such critical applications. The phase independence characteristics of the SRM enable it to operate also under partial phase failure conditions in its classical construction. Its reliability can be improved by applying special fault tolerant designs, respectively monitoring its condition and applying fault detection techniques.

The SRMs used in such safe electrical drive systems have to be fed from power converters which also have fault tolerant capabilities, and respectively they have to be controlled by systems that can auto-reconfigure if a fault occurs in the machine or in the power converter.

In this paper, a reconfigurable fault tolerant control system for SRMs to be used in safety-critical applications is proposed and tested by means of laboratory measurements performed by using a specially built up test bench.

The first part of the paper presents the main features of the SRM and emphasizes the inherent fault tolerance of this type of machine. Next the hardware structure of the proposed reconfigurable fault tolerant SRM control system is detailed; respectively its main programs are presented. The way the control strategy is reconfigured when winding faults appear is also outlined. In the final part of the paper, the laboratory tests performed in order to verify the correct functioning of the control system when a coil is opened is presented.

II. THE SWITCHED RELUCTANCE MOTOR

The SRM is a double salient electrical machine with a passive rotor [5]. In the SRM the torque is produced by the tendency of its rotor to get to a position where the inductance and the flux produced by the supplied stator winding are maximized (variable reluctance principle).

The SRM's rotor and stator both have salient poles, as it is shown in Fig. 1.

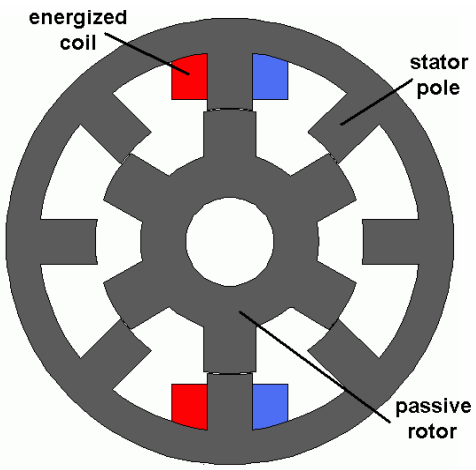

Fig. 1 The switched reluctance machine

The stator is manufactured of punched laminations bonded into a stack. The rotor, made also of conventional laminations, is passive, having no windings, excitation, squirrel-cage or permanent magnets [6].

The stator winding consists of coils placed on the stator poles. Typically, a phase is created by two series or parallel

connected coils placed on diametrically opposed poles of the machine. Each phase is independent and the machine's excitation is a sequence of current pulses applied to each phase in turn. The commutation of the SRM's phase currents must be synchronized precisely with the rotor position [7]. The SRM cannot be separated from the electronic supply device and its control [5].

The various advantages of the SRM make it an attractive alternative to adjustable speed drives [8]. The SRM drives can also deliver servo-drive performance equivalent to dc brushed motors. The rotor position sensing requirements, the need for an electronic converter and the higher torque ripple and noise, compared to other machines, are the main disadvantages of the SRM drives.

Although the SRM is inherently fault tolerant, when it is used in advanced safety-critical applications, its control system has also to be fault tolerant [9]. Supplementary, it has to have condition monitoring functions and must be able to mask the detected faults by reconfiguring the control strategy [10-11].

III. THE PROPOSED CONTROL SYSTEM

The proposed fault tolerant SRM control system is given in Fig. 2. It consists of a personal computer (PC), two microcontroller boards, analog-to-digital converter (ADC) boards, an inverter, the SRM to be controlled, an incremental position transducer (encoder) and current sensors.

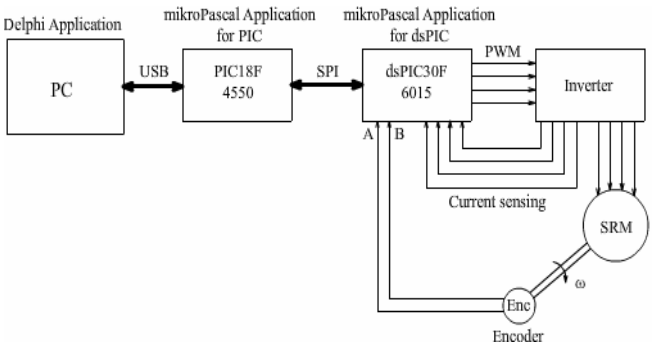

Fig. 2 The proposed control system of a SRM

The basis of the control system consists of the two peripheral interface microcontrollers (PICs) [12]. Although more complex structures could be chosen, these low cost devices were considered sufficient from the point of the required computing power and complexity of view.

Microchip has a complete family of such microcontrollers, which is the 30F family for digital signal processing. The 30F6015 digital signal processor (DSP) was chosen at the time when the design of the control system was begun. The main reasons of this selection are: its low cost, the quadrature encoder feature and the availability of 4 PWM channels which could be duplicated into 8 (as required by the specific SRM to be controlled) and simple programming [13]. Unfortunately this dsPIC do not feature a USB connection. Therefore an intermediary PIC (without digital signal processing capabilities) was chosen to relay the commands from the PC to the dsPIC.

Auxiliary connectivity was added to the PIC board so that it could connect to a maximum of two DSP boards (if necessary) and also to be used for debugging purposes. It should be mentioned that newer DSP boards have USB connectivity, so the PIC board will no longer be required for future similar projects.

Next all the main units of the above presented control system will be detailed.

A. The Interface Module

The *Interface Module* board shown in Fig. 3 features a Microchip PIC 18F4550 microcontroller.

Fig. 3 The *Interface Module*

This microcontroller has all the advantages of the 18F's family: high computational performance, economical pricing, superior endurance, enhanced Flash program memory, etc. Its fully featured USB 2.0 communications module serves as a communication node between the PC and the *Controller Module* board.

The board also features powering jumpers (USB or external ones), a LED for visual confirmation of the PICs on/off state, the serial peripheral interface (SPI) pins, auxiliary connectors which can be defined by the user, etc. Due to its SPI connectivity, the board can be used also in embedded control and application monitoring.

The PIC is loaded with a program designed in *mikropascal*, by using a USB library and several procedures that handle data transfer from the PC to the dsPIC and vice versa.

B. The Controller Module

The *Controller Module* features a dsPIC 30F6015 microcontroller, as its main processing unit. It has advanced specific motor control abilities, featuring eight PWM output channels, a quadrature encoder interface module feature (for up to 4x position measuring), Enhanced Flash program memory, the ability to be self-programmed under software control etc. It also has a wide operating voltage range, from 2.5 V to 5 V, increased temperature range for industrial usage and low power consumption.

The dsPIC board also includes a series of jumpers for powering (USB or external) or for compatibility with several encoders, auxiliary connectors used for data acquisition, including backup ones, several integrated circuits which relay the commands from the dsPIC (such as

the PWM or the SPI signals) or power the 8 LEDs used for visual confirmation, a quartz for generating the clock signal used by the dsPIC, additional components left for future use etc.

The dsPIC board and its components are shown in Fig. 4.

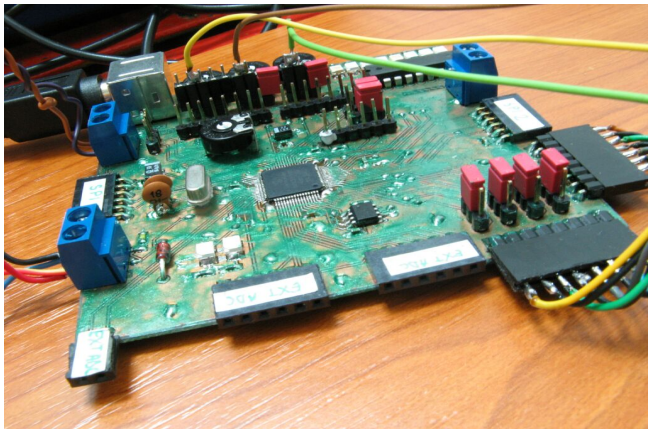

Fig. 4 The dsPIC *Controller Module*

Both boards were designed by means of Altium Designer.

C. *The switched reluctance motor to be controlled*

The special designed segmental stator SRM is shown in Fig. 5 [14].

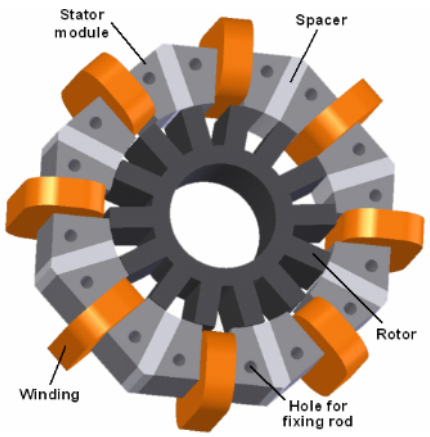

Fig. 5 The modular SRM to be controlled

It has four phases, each divided into two coils. These are wound around the yoke of the stator segment. The modules corresponding to a phase are placed diametrically opposed. The distance between two neighboring stator modules is set by nonmagnetic spacers. The rotor is a conventional one built of laminations and it has 14 poles.

Its nameplate values are: rated power 350 W, voltage 300 V and current 6 A. It is capable of developing a rated torque of 5 N·m. It was specially designed to work also at currents which is 33% greater than the rated value (up to 8 A) without overheating. A picture of the laboratory model of the modular SRM is given in Fig. 6.

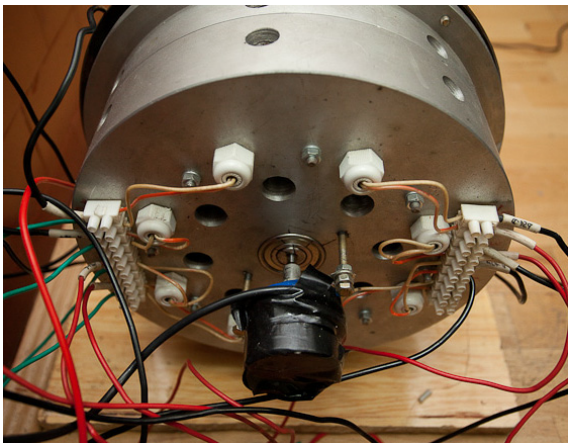

Fig. 6 The laboratory model of the modular SRM

The modular SRM has an increased fault tolerance due to the very good magnetic separation of the phases and to the independent coils wound on each module. It has proven that it can keep its movement despite of various stator winding faults [15].

On its shaft, a 1XP8001 type Siemens encoder is mounted, which generates a set of impulses for each unit of angular movement of the coded disk.

D. *The power inverter*

As each coil of the modular SRM has to be supplied separately, the machine is fed from an eight-phase modularly built power inverter shown in Fig. 7.

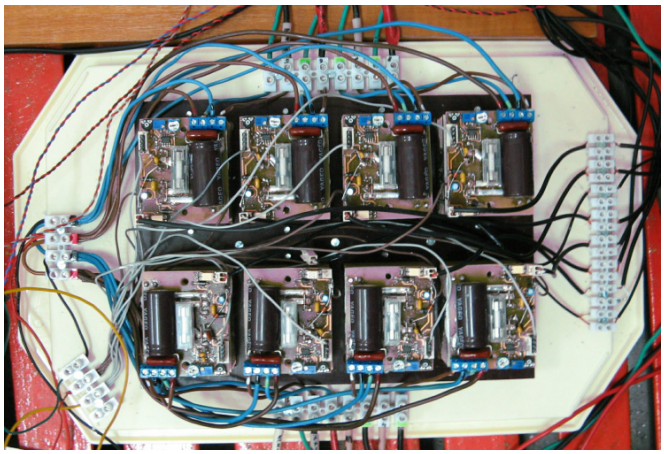

Fig. 7 The modular 8-phase power inverter

Its maximum voltage is 300 V and enables a maximum current of 10 A/phase. The input of each module is separated by galvanic means with an optocoupler, which allows its control to be made directly with the dsPIC controller.

E. *The analog-to-digital converter boards*

Two analog-to-digital converter (ADC) boards were used. The first board, shown in Fig. 8, comprises eight ADCs for all the eight currents of the SRM.

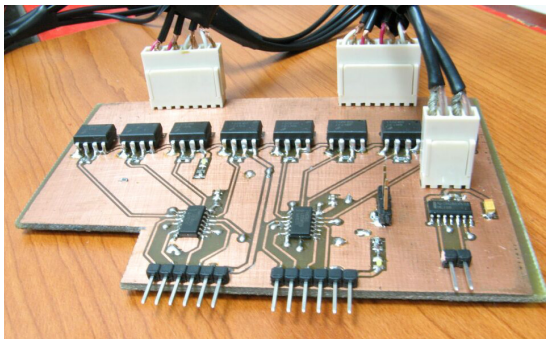

Fig. 8 The ADC board used in current feedback

Supplementary, another ADC board was used for signal reconditioning in order to maintain the command signals as close as possible to the 5 V requirements. It was necessary to compensate for all the components on the board which used part of the supplied voltage (some optocouplers, some LEDs, some resistors, etc.).

F. The position encoder and the current sensors

The angular position required by the control system is obtained from a 1XP8001 type Siemens encoder. It generates a set of impulses for each unit of angular movement of the coded disk.

The output currents of the inverter are measured by eight LA 55-P type LEM current sensors at the outputs of the 8-phase inverter.

IV. THE PROGRAMS OF THE CONTROL SYSTEM

The reconfigurable fault tolerant control system was implemented by using several programming environments.

The main part of the control program is a graphical user interface (GUI) given in Fig. 9. It is built up in *Delphi* environment, which is a set of object-oriented extensions to standard Pascal [16].

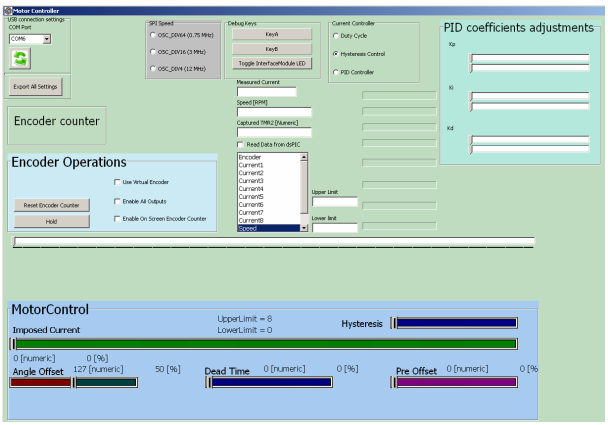

Fig. 9 The modular 8-phase power inverter

All the settings of the control system can be performed by the user via this friendly GUI:

- The *COM Port* button selects the connected communication port of the *Interface Module*.
- A *Refresh* button is used for returning the program's settings to their default values.
- In the *Export All Settings* panel, the different values set by the user are memorized.
- The *Encoder counter display* shows the relative position of the rotor.
- A radio buttons group is for selecting the SPI speed required to run the connectivity between the *Interface Module* and the *Controller Module*.
- The *Enable All Outputs* check box allows the users to obtain visual confirmation of the supplying of the controlled SRM.
- The *Reset encoder counter* is a manual reset of the encoder, used mainly for debugging purposes, as the *Hold* panel, too.
- The selection of the applied current control method can be performed from the *Current Controller* panel.
- By using three sliders, the PID controller's proportional, integrated and derivative coefficients can be set manually.
- In the *Motor Control* panel, the sliders are placed for the manual setting of the motor's speed, angle offset, dead time and pre-offset adjustments, for a smoother operation, torque ripple and vibration reduction, etc.

From the GUI, the measured currents and the actual speed of the machine can be red. In addition, the condition of the 8 coils can be followed.

The code of the *Interface Module* program was written in *mikropascal*, an adoption of the *Pascal* programming language for microcontrollers. The PIC module is programmed in order to facilitate the connection between the PC and the dsPIC module at high speed via USB 2.0. The code features a USB library that handles all the necessary commands between the *Controller Module* and the GUI. It defines a set of constants, initializes the USB and the USB enumeration process, handles the number of bytes received by the internal USB – CDC (Communication Device Class) receive buffer, returns the number of bytes copied by that buffer into a user defined buffer and copies the required bytes into the USB – CDC internal buffer if it is not empty. The USB – CDC emulates the USB port as virtual serial port, providing the same benefits as a 'real' USB port.

Once the USB connection has been established, the PIC, with its specific ports configured through a program, enables a USB interrupt procedure (necessary for the transfer) and activates a debug feature by means of an on-board LED, found on the *Interface Module* board. Afterwards, the SPI parameters are configured for master speed, idle configuration and clock idle. The main program deals with the bytes sent back and forth from the PC to the *Controller Module*, making sure no information is being lost in the process [16].

The program of the *Controller Module* was also written in *mikropascal*, and acted as an interpreter of the commands send from the *Delphi* application, and a series of procedures acting upon identifying the desired response. It is divided into several separate units for a more comprehensible approach, which allows them to be used by other programs as well. The project automatically creates a series of setting files and windows related libraries.

The main unit of the program, called *MotorController6015RealEnc*, handles all the data sent from the GUI, checks which action code has been sent and calls the appropriate function for it. It also ensures that all the protocols have been enabled, that the SPI communication is active and enables a loop in which all the main control procedures remain active. A capture from the main window of the program is shown in Fig. 10.

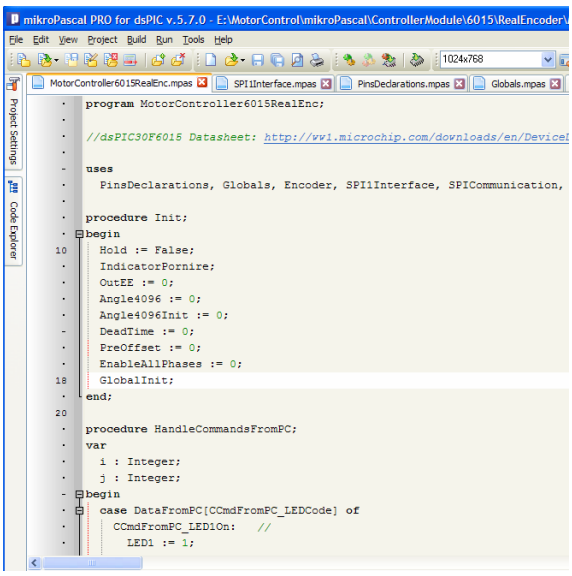

Fig. 10 The main window of the *Controller Module* program

Other units of the program are:

- The *SPI Interface*, which deals with the initializations regarding the SPI protocol and the interrupts required for the communication.
- The *PinsDeclaration* unit configures the dsPIC microcontrollers' pins for input or output, depending on the desired action.
- The *Globals* unit encompasses the main variables of the program, making them globally accessible.
- The *SPI Communication* unit handles the SPI connectivity between the PIC and the dsPIC board, sending information both ways, depending on the action required.
- The *MCP3001Controller* unit handles the ADC actions and acts as master for the 8 MCP3001 ADC units, which are slaves.
- The *Encoder* unit is specifically coded for the Siemens 1XP8001 encoder of the SRM.
- The *PosController* unit deals with the angle processing and the SRM phase distribution of the current impulses. It can be adjusted for any SRM configuration by setting up the numbers of poles as variables.
- The *MCPWM4Ph* unit handles the first, the PWM motor control method, by establishing the corresponding registries of the dsPIC for the enabling and disabling of the PWM modules. The second current control method, the hysteresis control, is handled by the *CurrentController* unit [17].

V. THE IMPLEMENTED CONTROL STRATEGY

The first task of the control system is to detect the opened winding faults. For this purpose, the current sensors used for the current control were employed. Initially a threshold was established as being at least 20% of the machine's rated current. If the measured current is under the threshold, the corresponding coil is considered to be faulty. As a fault is detected, starting from the next revolution an adequate reconfigured control strategy can be activated.

The opened coil faults lead to a decrease in torque and speed of the SRM, since the torque generation is directly proportional to the number of working coils, as it was demonstrated in [15]. It was also concluded that by increasing the current in a part of the healthy remained coils, the effects of the winding faults can be partially compensated.

Upon the type of the detected winding faults the proposed control system is able to reconfigure its control strategy upon three scenarios:

- If only a single coil is opened, the current in the other coil of the same phase is increased by roughly 20%.
- If two coils from different phases are detected as faulted, the other two coils of the corresponding phases are increased by the same amount of current.
- If an entire phase is opened (both coils opened of the phase) an increased current of around 20% is imposed in the previously supplied phase to the faulty one. The selection of this phase is function of the sense of rotation. All the other healthy remained coils are supplied with 10% greater currents.

In all these cases, it is expected that the rotation of the SRM to be continued despite the faults. Of course the torque ripples in these faulty conditions will be higher.

VI. LABORATORY TESTING OF THE CONTROL SYSTEM

To perform the laboratory measurements with the developed control system of the modular SRM, an advanced laboratory test bench was set up (see Fig. 11) [18].

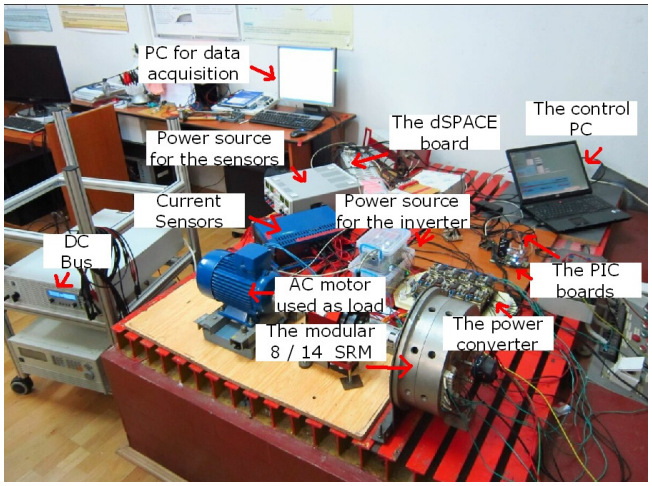

Fig. 11 The laboratory test bench

It consists of the control system (the *Interface* and the *Controller* modules), a personal computer to run the *Delphi*

application, a power supply for feeding the dc bus of the inverter, another source for the current sensors, and a third one for the dsPIC microcontroller system, the PIC microcontroller, ADC boards and the Siemens encoder placed on the shaft of the SRM.

For real time current acquisition, a *dSPACE ACE1103* was used, which is able to acquire the currents of all the 8 coils of the controlled modular SRM. The acquired data were both displayed by using the *Control Desk* application of the dSPACE system and saved on the hard disk of the computer for future graphical processing in MATLAB.

The laboratory measurements were performed for a speed of 300 r/min and 0.5 N·m load torque of the motor for four conditions of the modular SRM: the healthy machine, one opened coil fault, two opened coils faults (from different phases) and one opened phase fault.

From the numerous results obtained during the measurements, we chose one of the most significant given in Fig. 12. For better understanding, a zoomed view of the current waveforms is also given in Fig. 13.

Fig. 12 The current waveforms during the control system reconfiguration

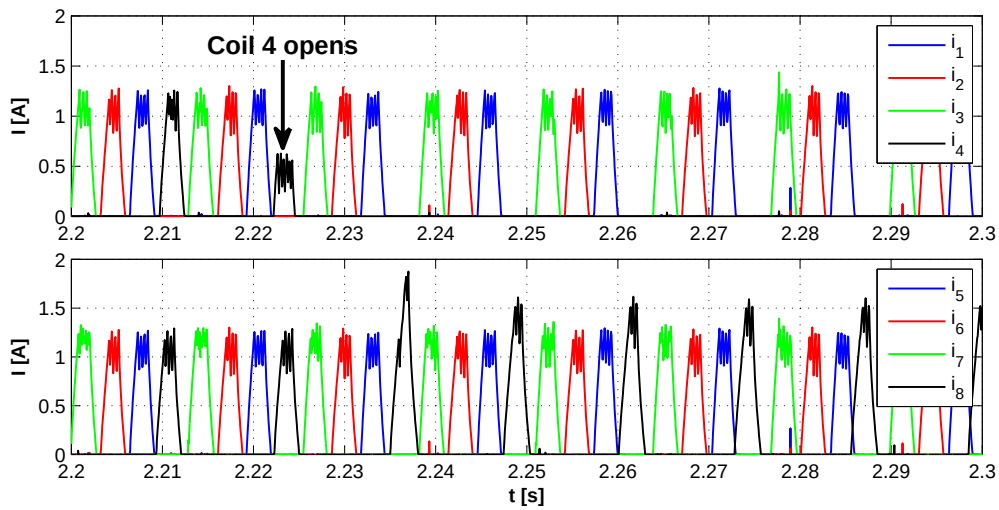

Fig. 13 A zoomed view of the current waveforms given in Fig. 12

As it can be seen in the above plots, the current of the 4th coil drops after about 2.22 s due to an open coil fault occurred. The control system increases by 20% and the current in the other coil is of the same phase (the 8th coil).

The presented results confirm the correct working of the reconfigurable fault tolerant control system in discussion.

VII. CONCLUSIONS

In safety-critical applications, the fault tolerance of all the equipment is obligatory. In the paper, a reconfigurable fault tolerant control system for a modular SRM having an improved fault tolerant design is discussed. It is able to

detect the winding faults of the SRM and to reconfigure the control strategy by the means of increasing the current in the healthy remained coils in order to maintain, as possible, the required torque and speed of the SRM.

The correct reconfiguration of the control system was proved by laboratory measurements performed on a test bench special developed for this purpose.

ACKNOWLEDGMENT

This work was partially supported by the Romanian Executive Agency for Higher Education, Research, Development and Innovation Funding (UEFISCDI) under the *Hardware-in-the-Loop Modular Platform for Testing the Energy Management of Competitive & Highly-Efficient Hybrid-Electric Vehicles* Joint Applied Research Project (PCCA) in the frame of "Partnerships" projects (PN II - National Plan for Research, Development and Innovation).

REFERENCES

[1] M. Blanke, *Diagnosis and fault-tolerant control*. Berlin (Germany): Springer Verlag, 2003.

[2] M. Zhang, *et al.*, "Design and verification of fault-tolerant components," *Methods, Models and Tools for Fault Tolerance,* pp. 57-84, 2009.

[3] N.H. El-Farra and A. Armaou, "Fault-tolerant process control," *International Journal of Robust and Nonlinear Control,* vol. 22, pp. 1-2, 2012.

[4] C.W. Johnson, *Failure in Safety-Critical Systems: A Handbook of Accident and Incident Reporting*. Glasgow (UK): University of Glasgow Press, 2003.

[5] G. Henneberger and I.A. Viorel, *Variable Reluctance Electrical Machines*. Aachen (Germany): Shaker Verlag, 2001.

[6] R. Krishnan, *Switched Reluctance Motor Drives: Modeling, Simulation, Analysis, Design, and Applications*. Boca Raton (USA): CRC, 2001.

[7] T.J.E. Miller, *Electronic Control of Switched Reluctance Machines*. Oxford (U.K.): Newnes, 2001.

[8] R. Krishnan, *et al.*, "Design procedure for switched-reluctance motors," *IEEE Transactions on Industry Applications,* vol. 24, pp. 456-461, 2002.

[9] T. Raminosoa, *et al.*, "Design and optimization of a switched reluctance motor driving a compressor for a PEM fuel-cell system for automotive applications," *IEEE Transactions on Industrial Electronics,* vol. 57, pp. 2988-2997, 2010.

[10] M. Ruba, *et al.*, "Novel modular switched reluctance machine for safety-critical applications," in *Proceedings of the 19th International Conference on Electrical Machines (ICEM '2010)* Rome (Italy), 2010, pp. 1-6.

[11] H.C. Chang, *et al.*, "Establishment and control of a three-phase switched reluctance motor drive using intelligent power modules," *IET Electric Power Applications,* vol. 4, pp. 772-782, 2010.

[12] T. Wilmshurst, *Designing Embedded Systems with PIC Microcontrollers: Principles and Applications*. Oxford (UK): Newnes, 2006.

[13] S. Arslan, *et al.*, "A design of DSPIC based signal monitoring and processing system," *Journal of Electrical and Electronics Engineering,* vol. 9, pp. 921-927, 2009.

[14] L. Szabó and M. Ruba, "Segmental stator switched reluctance machine for safety-critical applications," *IEEE Transactions on Industry Applications,* vol. 48, pp. 2223-2229, 2012.

[15] L. Szabó and M. Ruba, "On fault tolerance increase of switched reluctance machines," in *Proceedings of the IEEE Region 8 EUROCON Conference (EUROCON '2009)*, St. Petersburg (Russia), 2009, pp. 734-739.

[16] M. Cantù, *Mastering Borland Delphi 2005*. Indianapolis (USA): SYBEX, 2006.

[17] R. Gobbi and K. Ramar, "Optimisation techniques for a hysteresis current controller to minimise torque ripple in switched reluctance motors," *IET Electric Power Applications,* vol. 3, pp. 453-460, 2009.

[18] R. Terec, "Development of a Fault Tolerant Control System for Switched Reluctance Motors," Ph.D., Electrical Machines and Drives Department, Technical University of Cluj, Cluj (Romania), 2012.

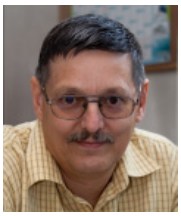

Loránd Szabó (M'04) was born in Oradea, Romania, in 1960. He received the B.Sc. and Ph.D. degree from Technical University of Cluj (Romania) in electrical engineering in 1985, respectively in 1995.

He joined the Technical University of Cluj (Romania) in 1990 as a research & design engineer. Since October 1999, he is with the Department of Electrical Machines of the same university, where he was a lecturer, associated professor and by now is a full professor. His current research interests include linear electrical machines, variable reluctance electrical machines, fault tolerant designs, fault detection and condition monitoring of electrical machines, etc. He published more than 210 papers in these fields.

Prof. Szabó's home page: http://memm.utcluj.ro/szabo_lorand.htm.

Mircea Ruba (M'11) was born in Satu-Mare, Romania, in 1983. He received the M.S. degree in electrical machines and drives from the Technical University of Cluj in 2008, and the Ph.D. degree in electrical engineering from the same university in 2010. During 2010-2011, he worked as post doctoral researcher at Université Libre de Bruxelles, Belgium for 11 months. Since the fall of 2011, he is an assistant at the Department of Electrical Machines and Drives at the Technical University of Cluj-Napoca. His research focuses on the design and optimization of electrical machines, control and power electronics.

Dr. Ruba's home page: http://memm.utcluj.ro/mircea_ruba.htm.

Rareş Terec was born in Cluj-Napoca, Romania, in 1985. He received the B.Sc. degree in electrical machines and drives from the Technical University of Cluj-Napoca in 2009. He received the Ph.D. degree in electrical engineering from the same university in 2012. His research focuses on advanced control strategies and fault detection of variable reluctance machines.

Dr. Terec's home page: http://memm.utcluj.ro/terec_rares.htm.

Pavol Rafajdus was born in 1971. He received the M.S. and Ph.D. degree in electrical engineering in electrical engineering from University of Žilina, Slovakia in 1995 and 2002 respectively. He is an associate professor at the Department of Power Electrical Systems of the same university since July 2005 and a scientific and research vice dean. His research interests cover topics regarding diverse reluctance electrical machines.

Assoc.prof. Rafajdus's home page: http://www.kves.uniza.sk/?menu=katedra&page=os&foto=2&tab=zam.