On the Fault Tolerant Switched Reluctance Machines

Mircea RUBA, Loránd SZABÓ, Daniel FODOREAN

Department of Electrical Machines, Technical University of Cluj
RO-400750 Cluj, P.O. Box 358, Romania; e-mail: Mircea.Ruba@mae.utcluj.ro

ABSTRACT

From the first approach of the fault tolerant concept till today, several proposals to improve the electrical machine's reliability had been published. Electrical machine designers accepted the concept in order to obtain an increased level of the requirements regarding safe operation in the case of several applications. As the machines evolution reached a high tech level, the fault tolerance level also required to be increased. Thanks also to the improvements in the field of power electronics and to digital signal processing today intelligent solutions can be provided in designing a fault tolerant electrical drive system. The separate phase feeding and control of the machines allow an easier approach of the fault tolerant tasks and offer better results. In the paper technical solutions for fault tolerant switched reluctance machines (SRM) will be presented. This type of machine had been selected for study because all the typical technical solutions regarding fault tolerant machines can be applied in its case.

INTRODUCTION

Throughout time, fault tolerance evolved from an idea, to a concept that is implemented in as many systems as possible. The first time the expression of system was mentioned in the field of computer engineering. A system was considered often a combination between hardware and software [1].

Hence implementing fault tolerance in a system requires a good knowledge over the entire problem, in order to obtain a solution that can provide service even in the case of fault appearance.

An electrical machine is a compact equipment that can work only within a full operating system. In this case, usually the appearance of one failure inside this subsystem, or outside nearby affecting it, would cause total lack of service. But not if the electrical machine is built to support defects. Not if the electrical machine was built upon in the concept of *fault tolerant electrical equipment.*

When trying to push a machine from ordinary construction with usual service delivery to a higher level (as a fault tolerant machine) a rich amount of ideas and a lot of experience is required.

The fault tolerant concept in the case of electrical machines means the rise of the operating level, and also increase in safety of the system that incorporates the electrical machine. More, there are electrical machines that can by its nature to offer a level of fault tolerance. In this category is included also the switched reluctance machine (SRM), because of the possibility to command and feed its every phase independently.

This was the reason why we concentrated in our study on this machine and tried to develop new topologies to add to the existing ones. New topologies will be proposed by our research team. For example a new type of winding placed in the stator slot for guiding the magnetic flux through two stator poles at the same time.

POSSIBLE FAULTS OF THE SRM

Nowadays, the trend is to build machines that can offer same services by using more simple structures and at lower manufacture costs. In this category can be placed also the SRM. From the ordinary SRM structure to that of fault tolerant one, this will have to suffer all sorts of changes regarding the inside structure.

To be able to build a fault tolerant SRM, first of all it must be known what fault can appear, and what influences over the machine’s behaviour they have. By referring strictly to the machine's internal structure only its windings can be defected, hence the rotor is a passive component with no real fault exposure possibility. The possible stator winding faults are:

i.) open circuit on one phase
ii.) short circuit of one phase
iii.) short circuit of one pole's winding
iv.) short circuit between two adjacent phases placed in the same slot.

SRM requires a power converter which feeds the phases with respect to the rotor position and the demanded torque. Hence the power electronics devices can be also serious sources of faults, that can affect the entire SRM drive system [2].

THE REMEDIES FOR THE FAULTS

The remedies for the above mentioned faults usually can be solved at the level of the converter by modifying the firing angles.

For example, a short circuit fault on one switch is remediable by an advance of the firing angle for the healthy phases [2]. The same method can be applied when a short circuit between one phase and the ground appears. This way the machine can operate with faulty phases, with the help of the healthy phases, and without the need of current increasing.

Regarding the machine itself, with respect to its windings, the most common way to treat the fault tolerance concept in SRM is by the doubling of the phases. This was maybe the first method patented in this field in 1989 [3]. The basic concept is to separate every phase, formed by the two windings on the opposite poles, in order to obtain independency in the case of faults of one winding to an other. For this case the converter was built with GTO power switches and power diodes to offer a quick reversal of the current after the switch off moment [4]. Multiplication of poles and phase numbers was also proposed in the same paper, underlining the improvements under fault operating.

When the machine is operating under faults it will have an unbalanced force distribution, because the faulted phase is no more contributing to the torque generation. In many applications this issue is not so important, but for others, where the precision is an important parameter, only the assurance of the continuous operation in case of a fault is not enough.

Hence machines that can balance the forces in the rotor in a case of fault were proposed. A possible solution should be to insert additional coils in the rotor. In this case the rotor becomes to be active. These coils are electrically interconnected in order to obtain a diametrical opposed link between the rotor poles, as shown in Fig. 1. These windings, being in closed loop, the currents induced by the stator field generate a field that is able to compensate the faulted phase, and allows the machine to operate in continuous mode without a significant change to its output parameters, as speed and torque [5].

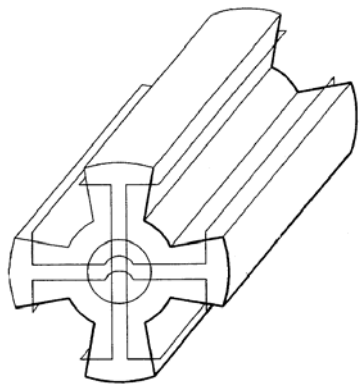

Fig. 1. Winding in the rotor of a fault tolerant SRM [5]

More complicated solutions regarding the stator windings are by splitting one phase into a set number of sub-phases, called *channels*. The set of channels are commanded in the same time, but from different modules of the converter. Even with the fall of one or more channels the machine can continue its operation. The effects of the failure are reduced by the exclusion of the faulted channel by using electronic switches [6].

In many applications SRMs are also used in generator mode. Obviously these also have to have a well-established level of safety in operating on the event of faults. A study of a 8/8 multi-pole single phase switched reluctance generator topology was described in [7]. This simple structure has low manufacture costs, but high efficiency. This generator is coupled to a converter having a new topology, which connects two coil banks in parallel. The fault tolerance of the machine is increased by disconnecting the faulty coils, and continuing the generation with a reduced output power.

A SRM having changed structure is given in [8]. The windings of the machine are tripled, as shown in Fig. 2.

The machine is four-phased. Each phase was tripled. This way the 24 poles on the stator were formed. For every phase 6 windings are used, placed in opposite diametric positions.

A study was performed regarded the analysis of continuous operation in case of different faults, like channel or phase opened or short circuited. The machine's behaviour in the case of open phase or short circuited one is practically the same. Of course in the case of short circuits the converter will have to suffer high currents over thru the switches in ON state.

The converter presented in this study had separated feeding blocks for each channel of each phase in order to obtain a high level of tolerance.

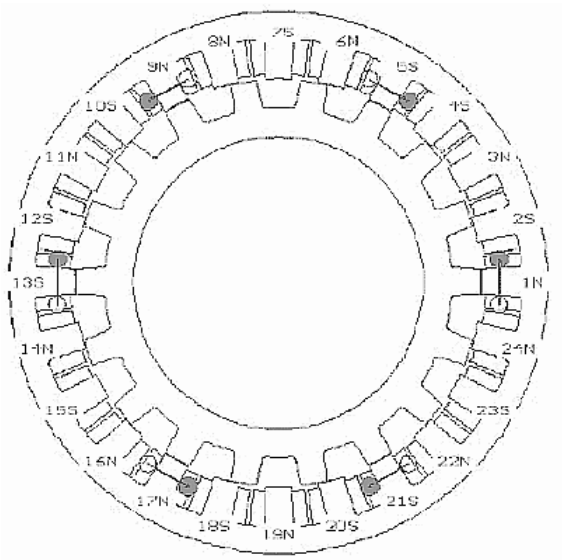

Fig. 2. Fault tolerant multi-channel SRM [8]

As it was mentioned already above, a good combination between an intelligent fault tolerant converter and a fault tolerant machine structure can ensure high level of tolerance and safe in continuous operation.

The intelligent control system detects the faults, isolates it, and then offers a remedial solution by for the remaining healthy phases in the machine. The evolution of digital signal processing allows more and more sophisticated systems to be coupled to the fault tolerant electrical machine structures.

Using differential current and phase flux sensing circuits and operational amplifiers the control system can accomplish a real-time management of isolating the faulted phases. Although the deactivated phases are not contributing longer, a speed maintaining strategy can assure also in faulty cases the constant value of the velocity.

Also, the intelligent control system must be able to start the motor also from a "dead zone", by using the undamaged phases to generate negative torque to move the rotor out from that position [9].

NEW FAULT TOLERANT SRM STRUCTEURE PROPOSED

After a relatively long study in the field of the fault tolerant machines, a proposal for new SRM topology came out. The main goal was to obtain a more simple structure, which means lower cost of manufacturing, having good result in operating both in normal and faulty cases.

The novel SRM structure will be coupled to adequate fault tolerant control systems that are able to correctly couple the phases of the SRM assuring high tolerance to diverse faults.

The proposed solution is a special design of the windings that will generate the magnetic flux thru two stator poles at the same time. In this structure, the windings are not wound around the pole, like in ordinary SRMs, but around the yoke, between two stator poles, as it can be seen in Fig. 3.

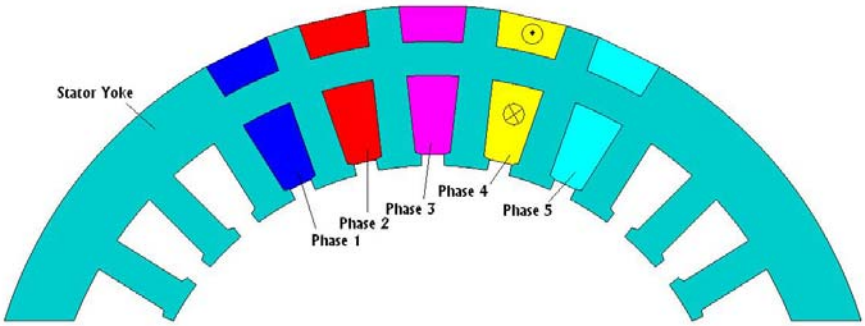

Fig. 3. Windings placed on the yoke of the SRM

This winding concept is used generally in the case of the transverse flux machines [10], but it can also be applied in the case of SRM. The rotor poles that would correspond to one stator phase, will not be as it usually is, delayed with 180 mechanical degrees, but will be adjacent. This way the flux path is shorter, entering and exiting the rotor at the same adjacent area, without passing by the shaft, and without crossing the entire rotor. Hence, the losses in iron will be lower, and also the flux leakage will have smaller values. The outline of the stator will have on left and right side of the windings extruded regions, continued against the stator poles, to concentrate the field and lower the outside leakage. Diametrically there will be placed an other set of two coils like the ones mentioned above, and these together will form a single phase.

The first tolerance level is assured by the actual 4 channels forming one phase, and involving 6 stator poles. If one channel is damaged by any kind of fault the machine is still operated by the remaining three channels. If a second fault occurs, even if the adjacent second channel on the diametric side is falling, there will still remain two channels driving the machine. The main idea is that even in the worst case of faults (a full phase fall) the machine can operate, of course with lower output. It will pass over the "dead zone", the area under the faulty windings, by its inertia.

Due to the operation by only one side of the machine, force unbalances will occur. In order to solve also this problem short circuited coils can be added to the rotor, similar ones as given in Fig. 1 [5].

The novel SRM needs an intelligent control system drive to sense the speed, and to monitor the condition of the machine. The main idea is to isolate the faulted channel in order to let the intact ones to drive the machine and to compute new firing angles to take over the lack of contribution of the windings from the faulted zone. The coils in the rotor can take now the action themselves and add power to the torque generation. The control system will use the same techniques presented previously in the paper.

CONCLUSIONS

As it was stated out, there are a lot of aspects regarding the SRM fault tolerant concept. There are several ideas regarding the windings, the geometrical structure of

the iron cores and also the intelligent drive system, which has to monitor the drive system and prevent output loss caused by any faults.

A novel fault tolerant SRM structure was proposed together with a converter which can assure separate feeding for each channel. Reconfiguration methods will be used for the control because the channels of the same phases will have to have the same command signals for their switches.

As it can be seen a lot of things can be done in this field. The authors consider that the new results obtained by them will be of real interest for all the specialists working in this field.

The new proposed development, gathered with a complex electromechanical system can provide a sure fault tolerant equipment [11].

REFERENCES

[1] Heimerdinger, W., Weinstock, C., "*A Conceptual Framework for System Fault Tolerance*," Technical Report CMU/SEI-92-TR-033, Carnegie Mellon University, Software Engineering Institute, Pittsburgh (USA), 1992.

[2] Suresh, G., Omekanda, A., "Classification and remediation of electrical faults in the switched reluctance machine," *IEEE Transactions on Industry Applications*, vol. 42, no. 2, 2006.

[3] Thomas, M., "*Fault tolerant switched reluctance machine*," USA Patent no. 4,896,088, 1989.

[4] Lequesne, B., Gopalakrishnan, S., Omekanda, A., "Winding Short Circuits in the Switched Reluctance Drive," *IEEE Transactions on Industry Applications*, Vol.41, no. 5, September/October 2005

[5] Hassan, M., "*Switched reluctance machine having unbalance compensation coils*," USA Patent no. 5,422,525, 1994.

[6] Rubertus, C., Weimer, A., "*Multiple winding channel, magnetic coupling-alterable reluctance electrical machines and their fault tolerant control*," USA Patent no. 36020,711, 1998.

[6] Tadashi, S., Calum, C., Miller, T.,J.,E., "Fault tolerant operation of single phase SR generators," *IEEE Transactions on Industry Applications*, Vol.35, No.4, 1999

[8] Ruba, M., Anders, M., "Fault Tolerant Switched Reluctance Machine Study," *Proceedings of the International Conference on Power Electronics, Intelligent Motion and Power Quality (PCIM '2008)*, Nürnberg (Germany), 2008, in print.

[9] Gerald, B., Stephen, R., Stephens, M., "*Fault management for a switched reluctance motor*," USA Patent No.4,869,089, 1990.

[10] Iancu, V., Popa, D.C., Szabó, L., Ruba, M., Trifu, M., "Comparative Study on Linear Transverse Flux Reluctance Machines," *Oradea University Annals, Electrotechnical Fascicle, Electrical Engineering Session*, 2006, pp. 136-139.

[10] Krishnamoorthy, G., Tesar, D., "Multi-Sensor Architecture for Intelligent Electromechanical Actuators," *Proceedings of the 12th IFtoMM World Congress*, Besancon (France), June 2007.