PERMANENT MAGNET LINEAR TRANSVERSE FLUX MOTORS

Dan-Cristian POPA, Vasile IANCU, Loránd SZABÓ

Department of Electrical Machines, Technical University of Cluj-Napoca
RO-400020 Cluj-Napoca, Romania; e-mail: Dan.Cristian.Popa@mae.utcluj.ro

ABSTRACT

The transverse flux machines (TFM), introduced at the beginning of the 80's, are possible solutions for diverse applications requiring special electrical machines [1]. The researches have focused until now mainly on rotary TFMs. A new type of permanent magnet linear transverse flux reluctance machine is proposed here. Such machines can be successfully applied for example in conveyor applications. The factors that influence the behaviour of the machine are also presented. Conclusions on the operating conditions of the machine are drawn at the end of the paper.

INTRODUCTION

The proposed motor is a variable reluctance machine. For simple construction the machine has a modular structure, as presented in Fig. 1. Here the variant with 3 modules is given. It was chosen due to the easier control done with a three-phase converter existing on the market.

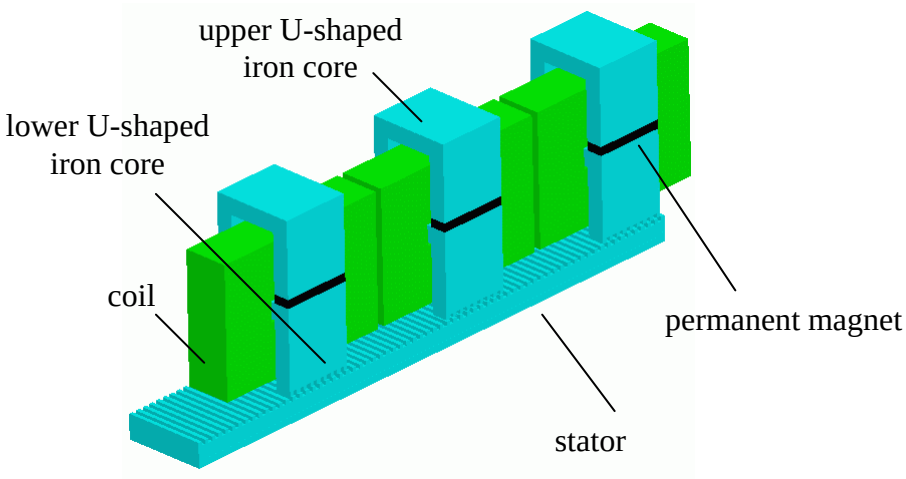

Fig. 1. The linear transverse flux reluctance machine with permanent magnets.

To work properly the modules have to be shifted one from the next one by τ/N, where τ is the tooth pitch and N is the number of the modules. The step size of the machine is given by the number of modules at a certain τ [2].

A module of the machine is built up of two U shaped iron cores. Two permanent magnets are placed on the lower U shaped iron core. The upper U shaped core closes the flux path given by the two permanent magnets, which are magnetized in such a way as their magnetic fluxes to be added.

A concentrated coil, similar to one of the transformer, is placed on the core branch from the middle of the module.

The working principle of the machine is similar to that of a rotary TFM with permanent magnets in the stator and passive rotor [1]. When the module is passive (having its command coil un-energized) the flux generated by the permanent magnets closes mostly inside the mover's iron core, Fig. 2.

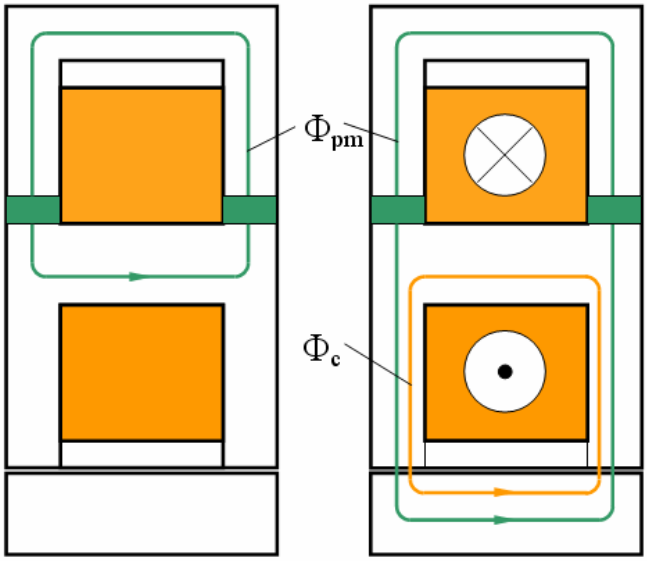

Fig. 2. The working principle of the machine.
a) passive module b) active module

When the command coil is energized (active module), the magnetic flux produced by it practically enforces the flux of the permanent magnets through the air-gap. This way tangential and normal forces are generated. Due to the variable reluctance principle the mover will be forced in a position where the teeth of the active module are aligned with those of the stator [2].

The most important issue concerning this machine is, of course, the developed tangential force. This is influenced by: the length of the air-gap, the magneto-motive force of the coil and the active cross section of the iron core poles.

The influence of the first two factors is well known. The variation of the force with the change of the two parameters presented above is non-linear [3]. The performances could be increased also by enlarging the active cross section of the iron core.

The increase of the iron core active surface (at the same m.m.f.) will result in greater forces. However, the space available for the command coil will be diminished. Besides that, as proved by FEM analysis presented in previous studies [3], the teeth are saturated. That’s why the simple increase of the active surface is not a good solution.

A design algorithm was performed specially for such machines. Using it several linear machines had been designed, both with small teeth surface and with enlarged one [4].

The improved construction having the best performances (given in Fig. 3.) will be presented next.

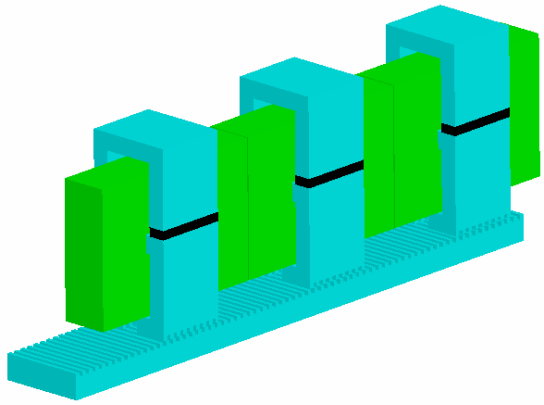

Fig. 3. The permanent magnet linear transverse flux reluctance machine with enlarged teethed pole surface.

One module's iron core is shown in Fig 4.

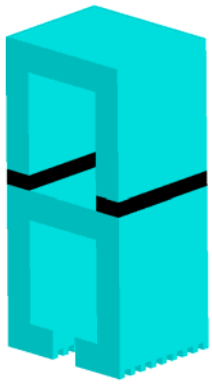

Fig. 4. The iron core of the machine given in Fig. 3.

FINITE ELEMENT METHOD ANALYSIS

Two types of linear motors (with small, respectively with enlarged teeth surface) were analyzed by means of 3D FEM computations. The main dimensions of a single module of the two machines in study are given in Fig. 5 [4].

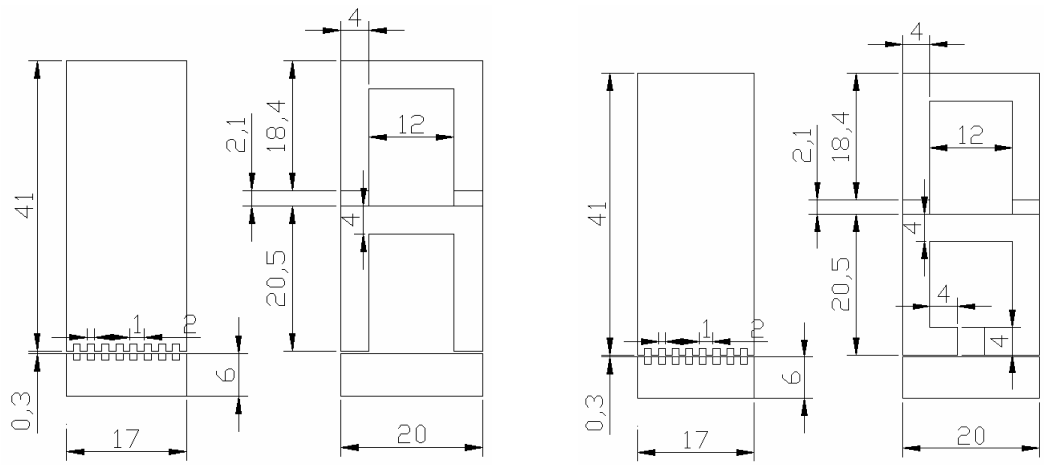

Fig. 5. Main sizes of the two linear TFM's modules with
a) small teeth surface; b) enlarged teeth surface – lateral and frontal views.

By the 3D FEM analysis two major issues were followed: the distribution of the flux density in the machine, and the developed forces. Since only a single coil of the machine is supplied during a step displacement, it was enough to analyze only a single module and the portion of the stator under it.

First the results concerning the distribution of the flux density shall be presented. Two important situations are discussed for the two machine variants in study:

- when the teeth of the module and the stator's ones are aligned and the coil is not supplied (passive modules), Fig. 6.
- when the module is shifted by $\tau/3$, 0.66 mm in this case, (position when the command coil begins to be energized) relatively to the platen, and its coil is energized, Fig. 7. The m.m.f. of the coil for both machines in study was the same, 220 ampereturns [4].

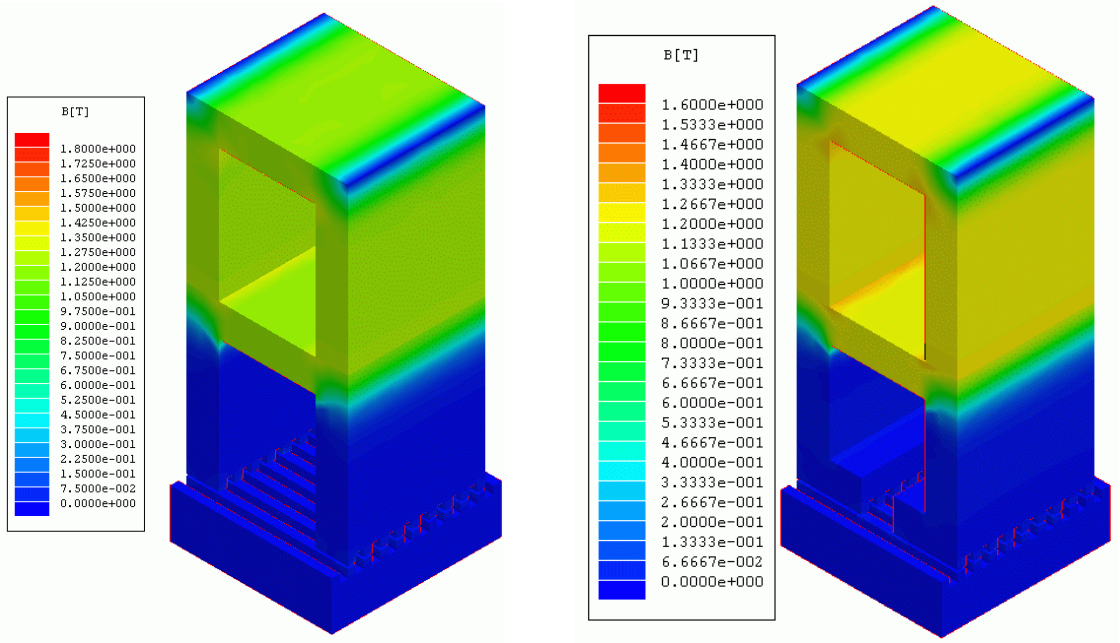

Fig. 6. Distribution of the flux density in an active module of the machine having a) small teeth surface; b) enlarged teeth surface.

As it was expected in this case the flux of the permanent magnets closes almost entirely through the core branch. The tangential and normal forces are both almost nil.

As it can be seen from the results given in Fig. 7 the distribution of the magnetic fluxes is radically different as in the previous case. Significant magnetic flux density is in the air-gap of both variants. This means that great forces are developed in both cases.

For the machine with small teeth surface the tangential force is of 2.6 N, while the normal one is of 25.3 N. In the case of the motor with enlarged teeth surface the tangential force is nearly double than in the previous case, 4.95 N, and the normal force has as well a greater value, being of 49.4 N.

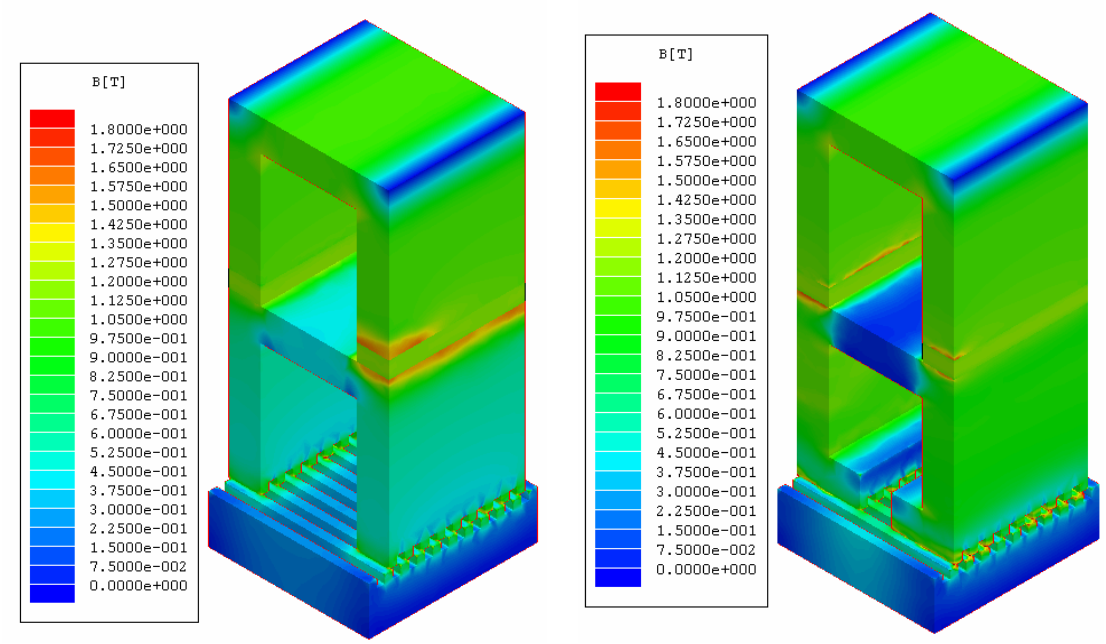

Fig. 7. Distribution of the flux density in an active module of the machine having small teeth surface; b) enlarged teeth surface.

A relevant issue to be studied in this case is the variation of the flux density in the air-gap. The flux density was computed for several points placed on the line in the middle of the air-gap, having the length of the module.

Next results for the case of aligned teeth on the two armatures will be presented. In Fig. 8 the flux density distribution in the air-gap for a module with small teeth surface is given.

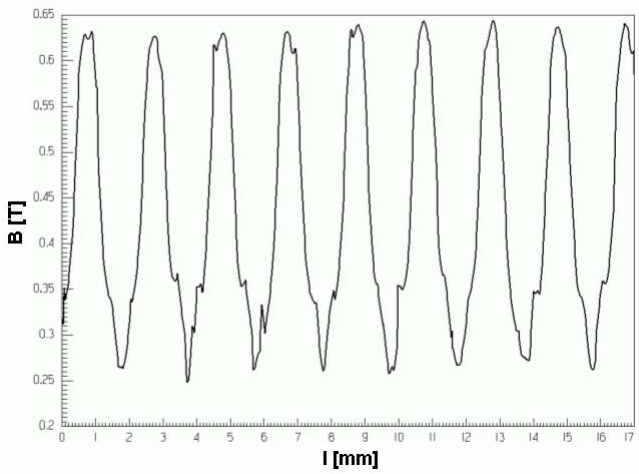

Fig. 8. Flux density distribution in the air-gap for a module with small teeth surface

As it was expected, the peak values of the flux density correspond obviously to the position of minimum air-gap (where the teeth on the two armatures are face in face), while the lowest values were obtained for the “slot per slot” position.

In Fig. 9 the same thing as in Fig. 8 is given for the module with enlarged teeth surface.

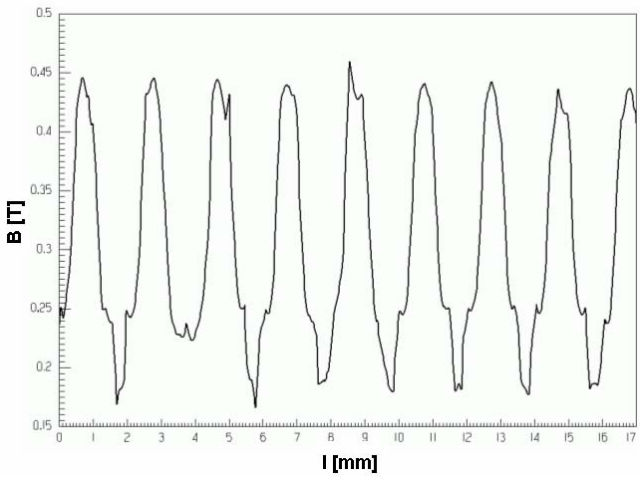

Fig. 9. Flux density distribution in the air-gap for a module with enlarged teeth surface

As one can notice, despite the forces are almost double, the values of the flux density are lower in the second case than in the first one. This is another improvement obtained by enlarging the teeth surface: the diminishing of the teeth saturation.

CONCLUSIONS

In the paper, a new structure of linear transverse flux motor was presented. The factors that influence the performance of the machine were analyzed. A significant improvement brought to this kind of machine was presented. The benefits obtained were also exposed in the paper.

The main advantage of this linear machine is that they can be built in very narrow variants, a frequent requirement in the industry. The cost of the machine is reasonable low due to the use of classical steel sheets for constructing its iron core.

The proposed linear motors seem to be a good solution for high precision positioning system used in various applications that require linear movement.

REFERENCES

[1] Viorel, I.A., Henneberger, G., Blissenbach, R., Löwenstein, L., ***Transverse flux machines. Their behaviour, design, control and applications***, Mediamira Publisher, Cluj-Napoca (Romania), 2003.

[2] Szabó, L., Popa, D.C., Iancu, V., ***Compact Double Sided Modular Linear Motor for Narrow Industrial Applications***, Proceedings of the 12th International Power Electronics and Motion Control Conference (EPE-PEMC '2004), Portoroz (Slovenia), pp. 1064 – 1069.

[3] D.C. Popa, V. Iancu, L. Szabó, ***Linear Transverse Flux Reluctance Machine With Permanent Magnets***, Proceeding of the International Conference on Transversal Flux Machines 2006, Changwon (South Korea), pp. 85 - 90.

[4] D.C. Popa, V. Iancu, L. Szabó, ***Linear Transverse Flux Motor for Conveyors,*** 6th International Symposium on Linear Drives for Industrial Application (LDIA '2007), Lille (France), paper 188.