Dual Motion Switched Reluctance Motor for Advanced Industrial Applications

Loránd Szabó, Ioana Benţia, Mircea Ruba
Department of Electrical Machines and Drives, Technical University of Cluj, Romania
E-mail: Lorand.Szabo@mae.utcluj.ro

***Abstract*-A special switched reluctance motor able to perform both rotary and linear motion is proposed. Due to its compact and reliable construction and to its simple control it could be used in diverse dual motion industrial applications. In the paper the construction, working principle and design of the proposed machine are detailed. Its performances are studied by means of finite elements method based numeric field analyzes and of dynamic simulations.**

I. Introduction

In several advanced industrial applications both rotary and linear movements are required. But in many cases, mainly due to space limitations, it is difficult to place two motors to ensure the two types of motion. For such applications the dual motion rotary-linear motors are the most effective technical solutions. These electromechanical converters practically integrate into a single frame two electrical machines: a rotary and a linear one (see Fig. 1) [1].

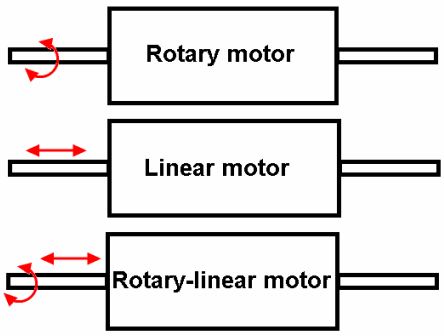

Fig. 1. The main types of motion of electrical machines.

The dual motion motors are efficient variants since they are direct-driven machines (the mechanical energy is directly transferred to the load) [2]. Thus any mechanical couplers (gears or belts) can be eliminated from the motion chain. Therefore the motion systems are simpler; with less mechanical losses and infrequent mechanical adjustment requirements.

Several rotary-linear motor types are cited in the literature [1]: the helical motion induction machines [3], [4], permanent magnet variants [5] and also diverse variable reluctance constructions [6].

In the paper a dual motion rotary-linear switched reluctance motor (RLSRM) is proposed. It aims to replace the traditional rotary-linear systems with a higher performance and lower cost alternative.

Such a dual motion motor could be used in several advanced industrial applications. For example in tooling machines to perform machining, drilling and threading, as well as in pick and place, storage and assembly apparatuses, mixers, robotic arms and end effectors, etc. It could be also applied in automotive applications, as in electrical/hybrid vehicles for actuating the active-wheels or to control the gearshifts in automated transmissions [5].

In the first part of the paper the main structure and the working principle of the proposed RLSRM are given. Also some details on the machine design algorithm are highlighted. The paper also deals with the three dimensional magnetic field analysis of the machine. Its dynamic performances are studied by means of a SIMULINK program developed by using the static characteristics of the machine obtained via the numeric field computations.

II. The Dual Motion Rotary-Linear Switched Reluctance Motor

The RLSRM, as also the traditional rotational and linear SRMs, works upon the variable reluctance principle [1]. Practically it is an efficient combination of a usual rotational switched reluctance machine (SRM) and a special linear SRM having several mover modules on its shaft. It has all the advantages of any SRM: mechanical robustness, constructive simplicity, low manufacturing and maintenance costs, high reliability and relatively easy control [7].

The modular iron core structure of the proposed RLSRM is given in Fig. 2.

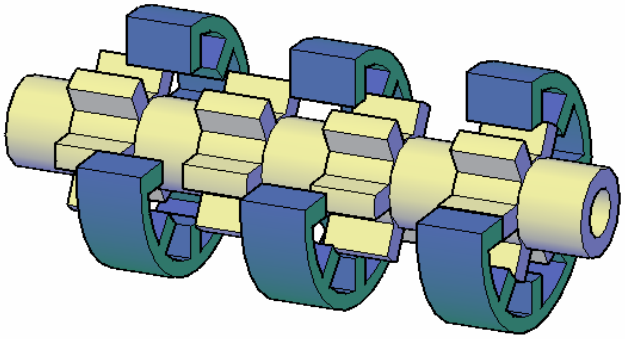

Fig. 2. The structure of the proposed motor (without coils).

As it can be seen the stationary part of the machine is built up modularly of three precisely shifted common 8 poles SRM stators, as that shown in Fig. 3.

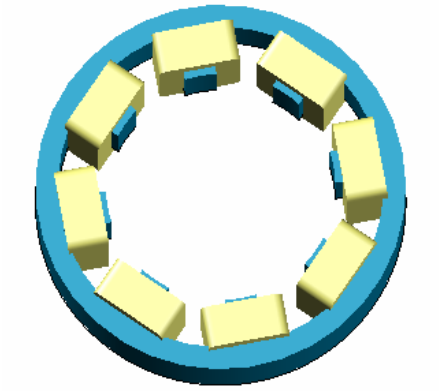

Fig. 3. One stator stack of the motor.

The mover armature is constructed of several common 6 poles SRM rotor stacks mounted on a common shaft. The number of the mover stacks depends on the length of the required linear movement.

Function of the sequence of feeding the coils of the stator stacks the mover may both rotate and move on the axial direction.

When rotation is required two coils from diametrically opposed poles on all stator stacks are fed function of the mover position and the imposed current pulses sequence. The stator which has its poles aligned in the axial direction with the poles of the mover will develop most of the total torque. The other two stator stacks will also contribute to the rotational movement. As they are symmetrically unaligned on the axial direction the thrusts developed by them will be equal, but of opposite direction. Hence their sum will be nil and no linear movement will be produced.

If the machine has to perform a movement in the axial direction it will work similarly to a linear SRM [8]. In this case several phases of a single module will be fed. The closest mover stack will be aligned upon the variable reluctance principle with the poles of that stator stack. By feeding in a right sequence the coils of the stator stacks continuous linear movement can be achieved.

The several possible control strategies were detailed in [9].

III. The Design of the Motor

The design of the RLSRM in discussion follows the classical steps as in the case of the rotary and linear SRMs. The sizing of the SRM is started by imposing the main design data [10]:

i.) the rated voltage and current (U_N, I_N)
ii.) the number of phases and of stator stacks (m, N_{st})
iii.) the number of stator and mover poles (Q_S, Q_R)
iv.) the rated power and efficiency (P_{2N}, η_N)
v.) the air-gap length (g)
vi.) the air-gap flux density in aligned position (B_{gmax})
vii.) the rated speeds for the rotational, respectively linear movements (n_N, v_N)
viii.) the rated torque and thrust (T_N, F_N).

The starting point of the sizing process is the mean diameter calculation of one stator stack (the double of the air-gap inner radius):

$$D_g = \sqrt[3]{\frac{P_{2N} \cdot Q_s \cdot k_\sigma}{Q_R \cdot \pi^2 \cdot \eta_N \cdot k_L \cdot \frac{n_N}{60} \cdot B_{g\max} \cdot \left(1 - \frac{1}{K_C}\right) \cdot A_s}} \quad (1)$$

where k_σ and k_L are the leakage flux factor (to be chosen between 0.75 and 1), respectively the aspect factor, computed against the mover pole number. A_S is the stator electrical loading and K_C the Carter's factor [11]. Special attention has to be paid to the aspect factor calculation since the active stack length (l_S) has to be in accordance with the step length during the linear movement.

As the mean diameter of the machine is already calculated the next sizing step is the computing the stator pole pitch:

$$\tau_S = \left(\frac{\pi \cdot D_g}{Q_S}\right) \quad (2)$$

The width of the stator poles is calculated as to be 0.4 of the stator pole pitch:

$$b_S = round(0.4 \cdot \tau_S) \quad (3)$$

The yoke height on the stator is taken as 0.7 of the pole width:

$$h_{jS} = round(0.7 \cdot \tau_S) \quad (4)$$

The moving armature's dimensions are computed by following the same steps as used in the case of the stator.

Several studies proved that it is better that the rotor poles to have an increased width as compared with the stator poles [12]. Therefore the mover pole width is computed as:

$$b_R = round(0.4 \cdot \tau_R) \quad (5)$$

Considering an ideal electromagnetic circuit with no losses, the flux paths close through the stator poles of one phase and its correspondent pole pairs on the mover. Hence, for the simplicity of calculation, the mover yoke height can be considered equal with the height of the stator yoke:

$$h_{jR} = h_{jS} \quad (6)$$

Having all the required sizes and the shaft diameter (d_{shaft}) chosen the mover pole height can be calculated as:

$$h_{pR} = round\left(\frac{D_g}{2} - \frac{g}{4} - h_{jR} - \frac{d_{shaft}}{2}\right) \quad (7)$$

The stator pole height is given by:

$$h_{pS} = round\left(\frac{D_0}{2} - \frac{D_g}{2} - h_{jS} - \frac{g}{2}\right) \quad (8)$$

where D_0 is the outer diameter of the stator stack [13].

The sizing of the coils were performed upon the well-known algorithm of designing concentrated windings [13].

The stator modules having been dimensioned the distance between the stator and mover stacks has to be designed as the RLSRM to be able to perform the required linear movement.

The distance between the axes of two neighbored stator stacks can be calculated by using:

$$l_{dist} = k \cdot \tau_{lin} + \frac{2\tau_{lin}}{N_{st}}, \quad k \in N,\ k \geq 2 \tag{9}$$

where τ_{lin} is the pole pitch of the moving armature on axial direction. The distance between two neighbored mover stacks is equal to the stack length.

In the next step of the design a preliminary checking the machine sizing via analytical methods can be performed. In the frame of these computations the mean torque and thrust can be computed and compared with the imposed values. Also the losses and the machine efficiency can be computed analytically. In this stage of the design a thermal analysis has to be performed, too.

By using the developed design algorithm a sample motor was sized for the following input data:

i.) $m = 4$, $N_{st} = 3$, $Q_S = 8$, $Q_R = 6$
ii.) $U_N = 300$ V, $I_N = 6$ A, $P_{2N} = 350$ W
iii.) $g = 0.4$ mm, $B_{gmax} = 1{,}5$ T, $\eta_N = 0.85$
iv.) $n_N = 600$ r/min, $v_N = 0.5$ m/s
v.) $T_N = 5.5$ N·m, $F_N = 25$ N (for a single module)

The main dimensions of the designed sample RLSRM are: $D_g = 120$ mm, $b_S = 18$ mm, $b_R = 20$ mm, $h_{pR} = 26$ mm, $h_{pS} = 27$ mm, $h_{jS} = 13$ mm, $h_{jR} = 13$mm. The mean torque, respectively the thrust computed analytically are: $T = 5.44$ N·m, $F = 24.31$ N.

The performed thermal analysis highlighted that the temperatures during steady-state regime do not exceed the imposed values.

A more profound and precise analysis of the designed machine can be performed via the finite elements method (FEM) based numeric field computations.

IV. FEM Simulations

The three dimensional model was developed by using the Flux 3D software. As the 3D FEM analysis requires a very great number of elements and accordingly very long simulation times, respectively due to the symmetrical construction of the RLSRM only a half machine was modeled (see Fig. 4).

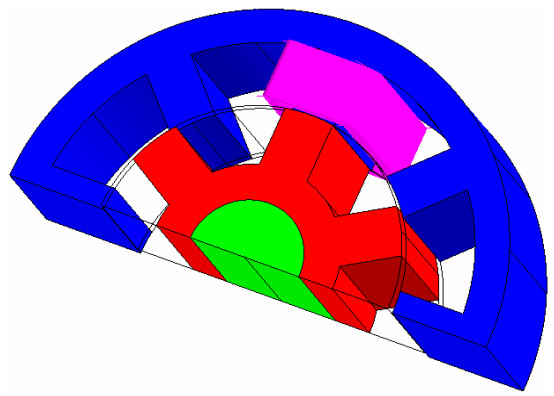

Fig. 4. The 3D model of the RLSRM.

Periodicity conditions concerning the included angle of the domain taken into study, respectively the offset angle were set in the program.

The automatically generated solution mesh with a zoom on the air-gap area is given in Fig. 5.

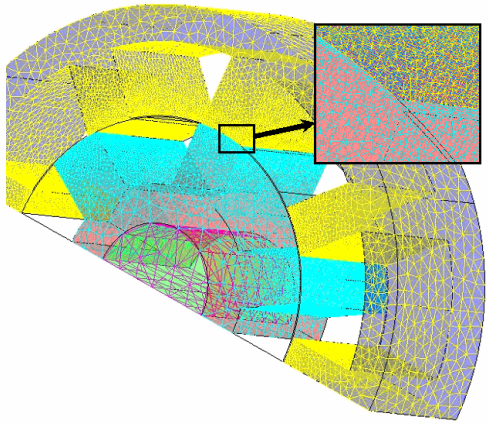

Fig. 5. The solution mesh generated by Flux 3D.

The simulations were performed for various phase currents and positions. The mover was both rotated around the shaft and moved on the axial direction.

From the numerous results here only two color maps of the flux densities are given. The maps were generated for the positions when the mover and stator poles are perfectly aligned on both directions of movement (Fig. 6a), respectively when the two poles are aligned only on the radial direction (Fig. 6b). In both cases the current was set to its rated value.

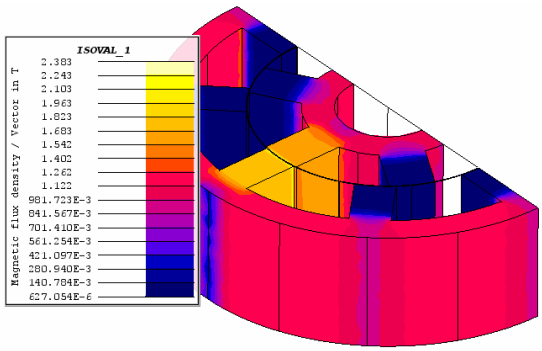

a) poles aligned on both directions of movement

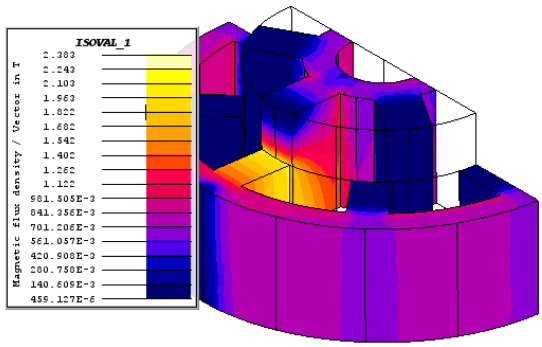

b) poles aligned only on the radial direction

Fig. 6. The color maps of the flux density obtained by Flux 3D.

Studying the saturation in the cores in all the cases taken into study it can be stated that these do not exceed the designed levels. The generated torque and thrust at rated conditions computed via the field computations are: 5.62 N·m, respectively $F = 23.31$ N. All these results emphasize the correctness of sizing the RLSRM.

In order to analyze the dynamic behavior of the proposed RLSRM the static characteristics (the torque, respectively the thrust function of the displacement and phase currents) has to be computed. The obtained 3D plots are given in Fig. 7.

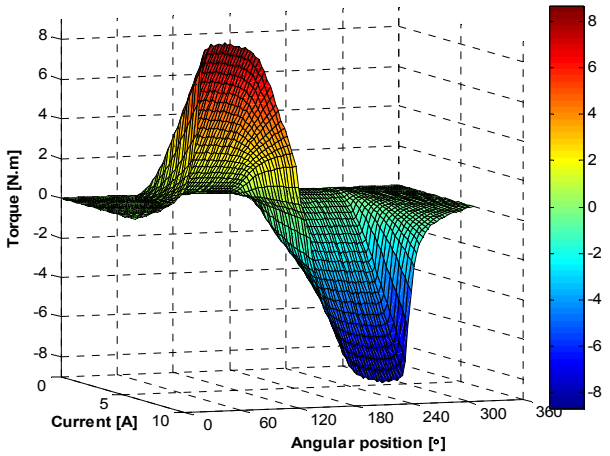

a) for rotation

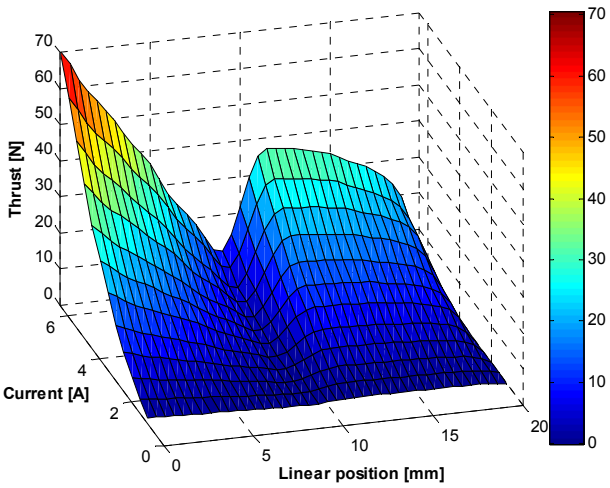

b) for linear movement

Fig. 7. The static characteristics obtained via numeric field computations.

These static characteristics will be integrated in the SIMULINK model as look-up tables [14].

V. Dynamic Simulations

To study the dynamic behavior under different conditions of the proposed RLSRM a SIMULINK model was developed. For easy understanding and use, the model was built up modularly, as shown in Fig. 8. The block imposing the speeds, the motion controller, the models of each phase of the power converters, respectively of the stator stacks and of the mechanical system can be easily distinguished.

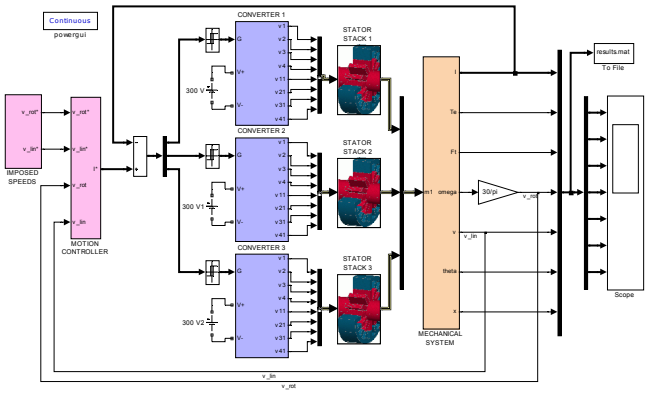

Fig. 8. The main window of the SIMULINK program.

Due to the limited space here only a single sub-system is presented, the block for computing the rotation related quantities (see in Fig. 9).

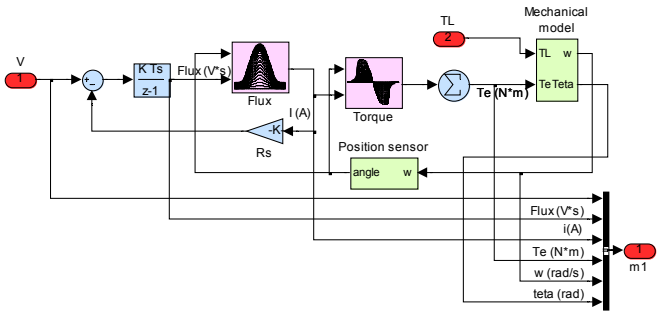

Fig. 9. The *Rotating movement* block.

The main simulation results are: the phase currents in the windings, the generated torque and thrust, respectively the angular and linear speed and displacement of the moving armature. These are both displayed directly in SIMULINK by using a *Scope*-type block and exported in the *results.mat* file for future processing. All the results given in this paper were plotted in MATLAB by using the data saved in these files.

Several external MATLAB files are used by the program (for generating the main machine parameters, for the look-up tables, for computing the commutation angles, etc.).

Numerous studies were performed by using the above presented simulation program. Next some of the most relevant and interesting results will be detailed. In a first approach the two kinds of movements were studied separately. Firstly the rotational movement was studied. For a profound analysis at the beginning only a single stator and mover stack was considered. In the machine at a time only the poles of one stator stack can be aligned with the mover poles on the axial direction. Hence it is interesting to study the torque development capability of the RLSRM also if the poles on the two armatures are not aligned on the axial direction.

The results in Fig. 10a and 10b are for the totally, respectively 33% aligned poles on the axial direction. When the poles are aligned the mover is accelerated rapidly to the imposed rated speed (600 r/min). The mean value of the developed torque during the constant speed working regime is

about 5.6 N·m, very close to the rated torque of the RLSRM. Due to the relatively great number of poles and the correct computation of the commutation angles the torque ripples are relatively small.

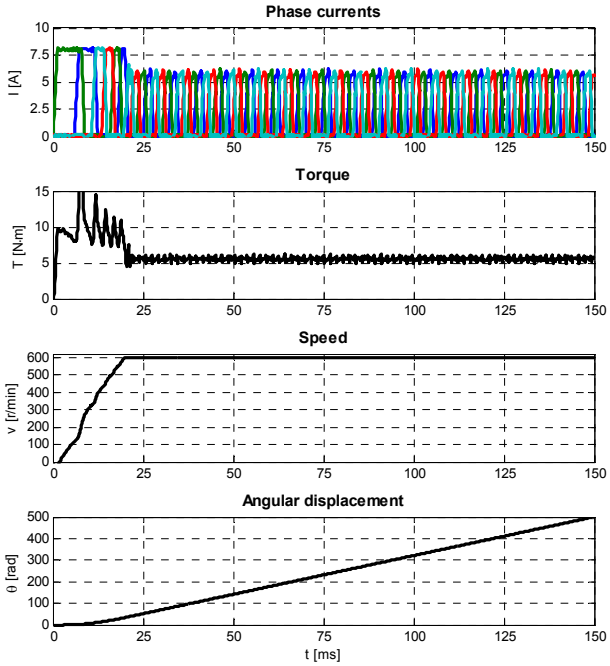

a) stacks aligned on axial direction

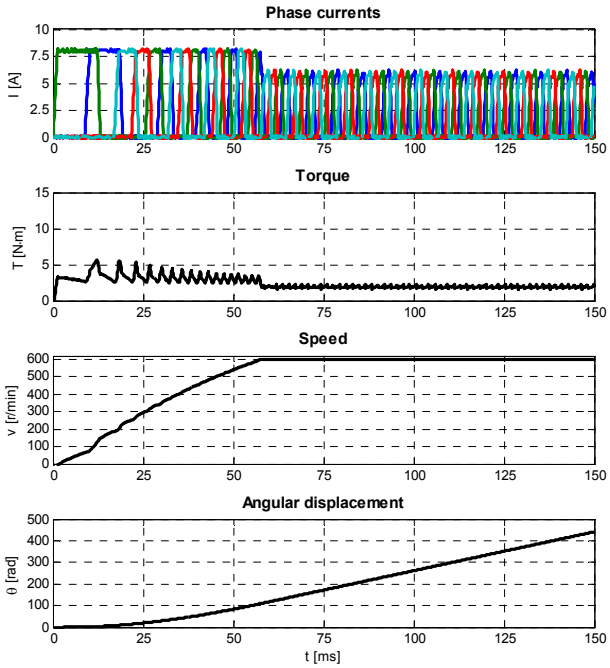

b) stacks semi-aligned on axial direction

Fig. 10. The results for the rotational movement.

In the worst case, when the poles are only in 33% aligned on the axial direction (see Fig. 10b) at the same currents the torque development capability is also reduced near the third of the rated torque (T = 1.9 N·m). As it can be seen also in this case the mover can achieve the imposed speed, but in more time. The torque ripples are a little bit larger than in the previous case.

As in normal working regime during the rotation of the RLSRM all its stator stacks are contributing the total torque development it is of interest to simulate also the rotation when all the three stator stacks are active. The obtained results are given in Fig. 11. The dynamic behavior of the RLSRM is better than in the case shown in Fig. 10a and the torque generated is by near 66% increased.

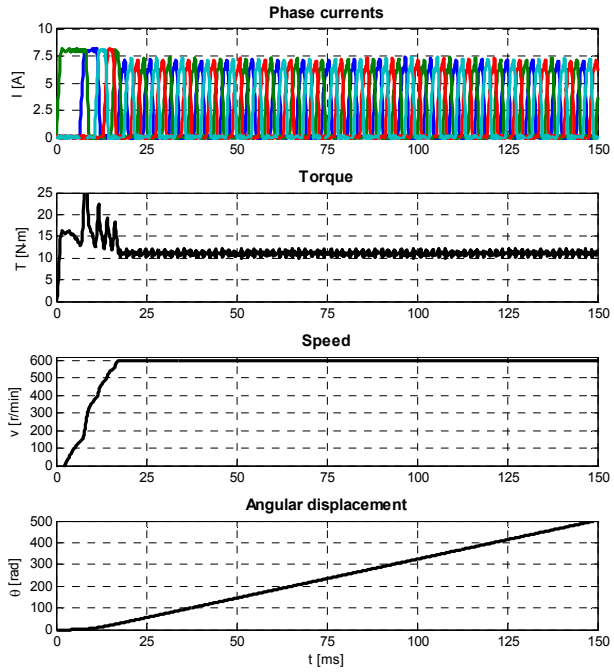

Fig. 11. The results for the rotational movement when all the stator stacks are active.

In Fig. 12 the main results for the linear movement are given.

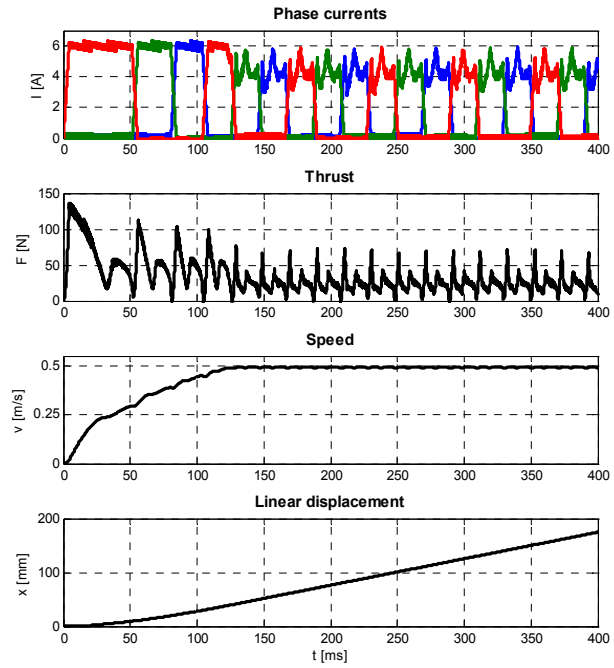

Fig. 12. The results for the linear movement.

In Fig. 12 the phase currents in the windings from the active stator module, the developed thrust (axial force), respectively the speed and the linear displacement of the moving armature are plotted versus time. A rated (0.5 m/s) speed was imposed by the motion controller. At the beginning higher tangential forces are required to accelerate the mover. In about 120 ms the speed reaches the imposed value. After this both the command currents and the tangential force are lower, as to maintain the constant speed linear movement. The force ripples are high, as it could be expected for a linear SRM with only three stator poles.

The behavior of the motor in study during the combined rotational-linear movement is of maximum interest. Therefore in Fig. 13 the results for such working regime are given.

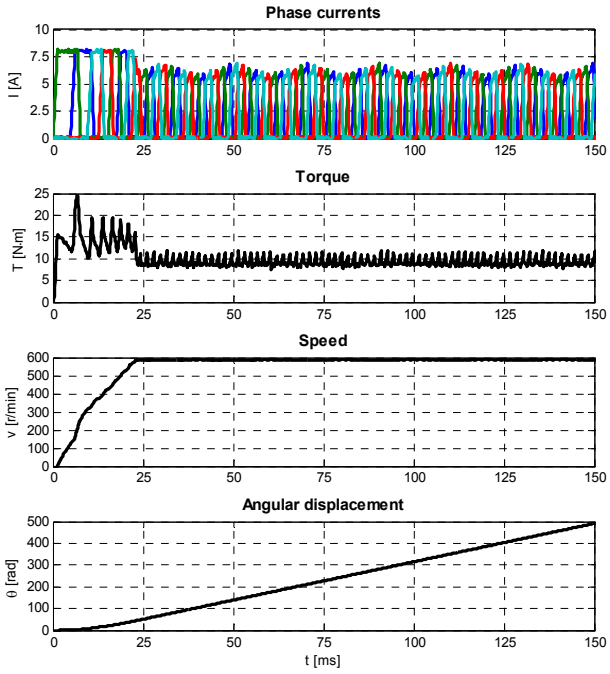

Fig. 13. The results for a combined rotational-linear movement.

In this case all of the stator modules are working. During the rotation the mover also has a linear displacement at 0.5 m/s speed. For the rotational movement the same speed was imposed as in the previous cases in study (600 r/min).

As it can be observed studying the results the required rotational motion is fulfilled also in the case of the simultaneously linear displacement.

During of one pole pitch long linear movement the overall torque development capability of the three stator stacks is varying between 133% and 166%. When a stack is perfectly aligned (100% of the rated torque is produced) the two other ones are aligned 33% (see Fig. 2) and both they can develop nearly the same torque. Therefore during the linear movement the torque development capability is changing within 33% of the rated torque.

It can be clearly seen in Fig. 13 as the peak values of the phase currents have an oscillation. When the torque development capability should be lower, greater currents are required to maintain the constant speed of the machine.

VI. Conclusions

The combination of a rotary and a linear movement on the same axis is frequently required in diverse industrial systems. For such applications the proposed RLSRM seems to be an excellent solution. Its control system is able to assure precise control of three types on movement (linear, rotational and combined linear-rotational).

The proposed advanced simulation program was proved to be very useful in studying the diverse complex working regimes of the proposed machine. All the simulation results emphasize both the usefulness of the proposed machine and the effectiveness of the developed control system.

Future work is related to the development of a laboratory model of the RLSRM and of the control system capable to enable well-coordinated dual motion.

Acknowledgment

This paper was supported by the project "*Doctoral studies in engineering sciences for developing the knowledge based society–SIDOC*" contract no. POSDRU/88/1.5/S/60078, project co-funded from European Social Fund through Sectorial Operational Program Human Resources 2007-2013.

References

[1] I. Benţia and L. Szabó, "Rotary-linear machines - A survey," Journal of Computer Science and Control Systems, vol. 3, pp. 11-14, 2010.

[2] R. Wrobel and P.H. Mellor, "Design considerations of a direct drive brushless machine with concentrated windings," IEEE Transactions on Energy Conversion, vol. 23, pp. 1-8, 2008.

[3] T. Onuki, et al., "Induction motor with helical motion by phase control," IEEE Transactions on Magnetics, vol. 33, pp. 4218-4220, 1997.

[4] J. Alwash, et al., "Helical motion tubular induction motor," IEEE Transactions on Energy Conversion, vol. 18, pp. 362-369, 2003.

[5] P. Bolognesi, et al., "A low-complexity rotary-linear motor useable for actuation of active wheels," in Proceedings of the International Symposium on Power Electronics Electrical Drives Automation and Motion (SPEEDAM '2010), Pisa (Italy), 2010, pp. 331-338.

[6] J. Pan, et al., "Investigation of a rotary-linear switched reluctance motor," in Proceedings of the XIX International Conference on Electrical Machines (ICEM '2010), Rome (Italy), 2010, pp. 1-4.

[7] T.J.E. Miller, Electronic Control of Switched Reluctance Machines. Oxford (U.K.): Newnes, 2001.

[8] I.A. Viorel, et al., "Speed-thrust control of a double sided linear switched reluctance motor (DSL-SRM)," in 18th International Conference on Electrical Machines (ICEM '2008), Vilamoura (Portugal), 2008.

[9] I. Benţia, et al., "On the control of a rotary-linear switched reluctance motor," in Proceedings of the 5th International Symposium on Computational Intelligence and Intelligent Informatics (ISCIII '2011), Floriana (Malta), 2011, pp. 41-46.

[10] R. Krishnan, et al., "Design procedure for switched-reluctance motors," IEEE Transactions on Industry Applications, vol. 24, pp. 456-461, 2002.

[11] I.A. Viorel, et al., "On the Carter's factor calculation for slotted electric machines," Advances in Electrical and Computer Engineering, vol. 7, pp. 55-58, 2007.

[12] T. J. E. Miller, Switched Reluctance Motors and Their Control: Magna Physics, 1993.

[13] P. Vijayraghavan, "Design of Switched Reluctance Motors and Development of a Universal Controller for Switched Reluctance and Permanent Magnet Brushless DC Motor Drives," Ph.D., Virginia Polytechnic Institute and State University, 2001.

[14] I. Husain and S.A. Hossain, "Modeling, simulation, and control of switched reluctance motor drives," IEEE Transactions on Industrial Electronics, vol. 52, pp. 1625-1634, 2005.