Analytical Analysis of the Tubular Transverse Flux Reluctance Motor

Dan-Cristian POPA, Vasile-Ioan GLIGA, Loránd SZABÓ, Vasile IANCU

Electrical Machines and Drives Department
Technical University of Cluj-Napoca, Faculty of Electrical Engineering
400750 Cluj-Napoca, P.O. Box 358, Romania, e-mail: Dan.Cristian.Popa@mae.utcluj.ro

***Abstract* – The paper deals with a new type of tubular electrical machine with modular construction. It can develop high force at short strokes. The structure is of transverse flux machines class and it operates based on the variable reluctance principle. The starting point of the modular tubular motor construction is a linear transverse flux reluctance machine. The design algorithm of the proposed machine is described in details, as well as an analytic approach based on the equivalent magnetic circuit to validate the correct sizing of the machine. An example is given, and the values of the flux densities obtained in different parts of the machine from analytical analysis are in good accordance with the starting design data.**

***Keywords:* tubular motor, transverse flux machine, variable reluctance machine, magnetic equivalent circuit.**

I. INTRODUCTION

The most researches on the transverse flux machine, introduced at the beginning of the 80's in the last century, were focused on the rotary variants [1]. The achievements in the field of the linear transverse flux machines were considerably less significant. In this paper a new type of variable reluctance tubular machine is proposed. In general terms, from the idea standing on the basics of this machine both rotating and tubular machines can be obtained.

The machine in study is originated from the linear transverse flux reluctance machine in modular construction. A group of researchers from the Technical University of Cluj-Napoca have proposed such a structure with hybrid excitation, which resulted as a combination between the rotary variant of a transverse flux machine with passive rotor, as one of the already conventional types of transverse flux machines, and permanent magnets and a Sawyer motor [1].

A simpler variant from the constructive point of view, with similar performances as the structure described above, was obtained by removing the permanent magnets from the modules of the mobile armature, having only electromagnetic excitation.

In order to increase the developed tangential force, the surface of the teeth was enlarged [4] so that the module had the same section in all its parts.

In this case, the stator of the machine is the passive armature and the mover, which carries the coils, represents the inductor, having a minimum number of three modules. The main shortcoming of a linear machine is given by the existence of a big normal force, of about ten times greater than the tangential one. By unfolding the structure without permanent magnets and enlarged surface of the teeth, Fig. 1b, after the direction of movement, a tubular variant, also in modular construction, is obtained [3].

II. THE STRUCTURE OF THE TUBULAR TRANSVERSE FLUX RELUCTANCE MACHINE

The inductor, usually the stator, has a modular construction, Fig. 1. The minimum number of phases N required in order to obtain a continuous movement is three [3, 4]. The iron core of a phase is built of m magnetic pieces, called modules, alternating with m-1 non-magnetic pieces, named spacers, Fig. 1. Each phase has an independent winding. The stator pieces have the same construction like the stator of a SRM. Each module can be made either of classical steel sheets or of soft magnetic composite material. Each module has Z poles and slots. The required distance between them is assured by the non-magnetic pieces, with different axial length than the stator spacers.

A phase's axial tooth and slot form together the tooth pitch τ. As in the case of the linear machine, the positioning step is given by the tooth pitch and the number of modules.

In the case of the linear transverse flux reluctance machine, in order to work properly the modules have to be shifted one from each other by $k\tau + s_m + \tau/N, \quad k \in \aleph$, where τ and N have the same significances like those above mentioned for the tubular machine. This condition is applied also to the motor proposed here. But, unlike the linear machine where the modules were placed at the construction in an aluminum case in such way that this shifting between the modules was provided, at the tubular motor the shifting is created by using non magnetic spacers, Fig. 1 [2].

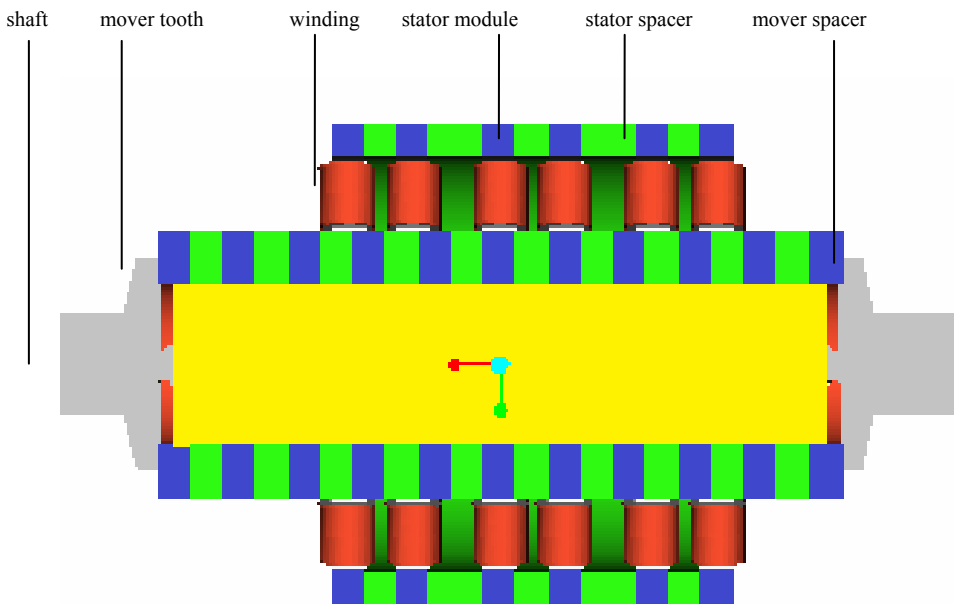

Figure 1. Longitudinal section through tubular transverse flux reluctance machine.

The induced armature, the mover, is passive in the case of the tubular machine, too, and the toothed structure must be obtained as well, but it will be in fact a cylinder. The construction with magnetic and non-magnetic pieces can be used as in the stator. The form of the pieces is much simpler than for the other armature, just a magnetic or non-magnetic cylinder, with a place in inner part for assembling the shaft, made also of non-magnetic material, Fig. 1 [2]. The advantages given by this construction are, as in the case of the stator, a lower weight and cost.

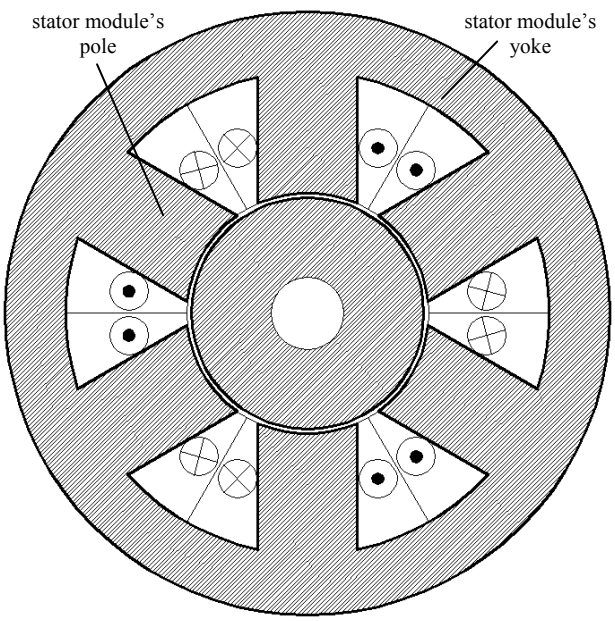

Figure 2. Cross section through the transverse flux tubular machine.

The disposal of the windings of the tubular machine is shown in a cross section of the machine, Fig. 2. The variant with concentrated windings around each tooth of the stator, connected in series, is presented. Another possible solution would be with coils wound around the yoke.

III. DESIGN ALGORITHM

The most important characteristic of the linear transverse flux reluctance machine is the developed tangential force. The normal force is about ten times bigger than the tangential one, and this is one of the major shortcomings of all linear machines [5]. As stated before, the existence of only the traction force due to the compensation of all the attraction forces is one of the most important advantages of the tubular variant. The force is given, like in the case of the linear structure, by a single module with energized winding. The main dimensions and excitation magneto-motive force (mmf) strongly depend on the required traction force. This motor has the particularity that the iron core of the two armatures is not homogenous. Considering that this introduces major difficulties from the first steps of the design stages, one can start from the hypothesis that the whole structure is made of magnetic material, the error being relatively small.

The traction force of any linear motor can be calculated analytically or by finite element analysis. In this paper, the basic aspects of an analytic approach shall be covered. The principle used to compute the developed forces at any linear variable reluctance machine is the variation of the magnetic energy in the air-gap versus the linear displacement [6]. The expression of the magnetic energy, where the elemental volume is function of mover's position, is (1).

$$W_m = \frac{1}{2} \cdot \frac{B_g^2}{\mu_0} \cdot \int dv = \frac{1}{2} \cdot \frac{B_g^2}{\mu_0} \cdot A_p \cdot g = \frac{1}{2} \cdot \frac{B_g^2}{\mu_0} \cdot R \cdot \alpha \cdot g \cdot (t_m - x) \quad (1)$$

$$f_T = \frac{\partial W_m}{\partial x} = \frac{1}{2} \cdot \frac{B_g^2}{\mu_0} \cdot g \cdot (-R \cdot \alpha) = -\frac{1}{2} \cdot \mu_0 \cdot F^2 \cdot \frac{R \cdot \alpha}{g} \quad (2)$$

$$F = \frac{1}{\mu_0} \cdot g \cdot B_g \quad (3)$$

The traction force f (2) and the coil mmf F (3) are expressed above, where the notations are: A_p – common armatures area, g – air-gap length, R – stator inner radius in the air-gap, α – stator pole angle, x – axial coordinate B_g – peak air-gap flux density value in aligned position.

The force f (3), is constant and does not depend on the axial length of the armatures, but on the square of the coil's mmf, pole circumferential length in air-gap ($R\alpha$) and air-gap length g. Considering the structure of the tubular motor proposed here, the traction force developed by an energized phase is:

$$f_{ph} = \mu_0 \cdot F^2 \cdot \frac{R \cdot \alpha}{g} \quad (4)$$

Starting from these relationships, a connection between the force and the magnetic and geometric dimension of the machine can be established:

$$R = \frac{\mu_0}{4} \frac{K_C K_S}{r} \frac{f}{C_r \cdot B_g^2 \cdot g \cdot \alpha \cdot m \cdot Z} \quad (5)$$

where K_C, K_S are the Carter's and saturation coefficient, r is the ratio between the common axial length of the stator and mover pole and the polar pitch, C_r is the air-gap equivalent reluctance coefficient, Z is the number of poles of a module.

One must take into account that K_C and C_r coefficients are function of the air-gap length to mover pole pitch g/τ and mover pole axial length to mover pole pitch, lp/τ ratios, and also that the value of α is at designer's choice.

Considering that the area of a slot is given by

$$A_s = \frac{2g \cdot B_g}{\mu_0 J_1 \cdot K_{fill}} \quad (6)$$

and taking into account some simplifying geometric hypothesis, one can obtain the height of the pole h_p:

$$h_p = \frac{\sqrt{2 \cdot A_s \cdot \sin\alpha + (\frac{2\pi}{Z} - \alpha) \cdot \frac{(1+\cos\alpha)}{2} \cdot [R^2 \cdot (\frac{2\pi}{Z} - \alpha) + 2 \cdot A_s]} - (\frac{2\pi}{Z} - \alpha) \cdot R \cdot \cos\frac{\alpha}{2}}{(\frac{2\pi}{Z} - \alpha) \cdot \frac{(1+\cos\alpha)}{2}} \quad (7)$$

All the other geometric dimensions result easily. The exterior radius of the stator is computed considering the flux that closes through the yoke at a typical SRM [7].

$$R_e = R \quad (1 + 0{,}8 \quad \frac{\alpha}{2}) + h_p \quad \cos\frac{\alpha}{2} \quad (8)$$

The proposed algorithm was applied in order to obtain a motor developing a maximum tangential force of 500 N. The chosen values are: peak air-gap flux density $B_g = 1.38$ T, current density $J = 5 \cdot 10^6$ A/m^2, air-gap length g = 0.5 mm, slot fill factor $K_{fill} = 0.4$, saturation coefficient $K_S = 1.4$, Carter's factor $K_C = 1.6$, air-gap equivalent reluctance coefficient $C_{rc} = 1.3$, stator pole axial length per pole pitch $r = 1/2$. For the proposed machine, $Z = 6$ poles were considered, and the number m of modules is 2. The angle α of a pole was considered to be of 50°.

The necessary area of the stator slot is (6) $A_s = 5.5$ cm^2 and the required mmf per coil is (3) $F = 1650$ Aturns. In this case the height of the pole was computed (7), h_p = 50 mm, the exterior radius being (8) R_{ex} = 115 mm. the motor is supplied with a voltage $U = 120$ V and has a rated current $I = 37.5$ A, the number of turns being 44.

IV. ANALYTICAL ANALYSIS USING THE MAGNETIC EQUIVALENT CIRCUIT

In order to check the validity of the proposed design algorithm, an equivalent magnetic circuit for the proposed structure was built up, Fig. 3 [8]. The circuit is for three poles, the yoke parts and the slots between them and the corresponding part of the mover. Besides the mmf of a coil F, it is known, using the determined geometric dimensions, the reluctance of the yoke R_y, of the pole R_p, of the air-gap R_g and of the mover R_m. The leakage reluctances $R_{\sigma p}$ and $R_{\sigma s}$ are due to the air between two neighboured coils and to the air-gap.

The problem is to find out the fluxes through each branch of the circuit. It is solved by applying the Kirchhoff's laws at the obtained circuit [9]. One must underline that the first equation can be written correctly only for the middle branch. The solution of the obtained equation system results easily using modern programs.

Consequently, one can compute the percentage value of each flux from the greatest one in the circuit which is for this motor, the one in the poles. The flux density value in the poles, yoke, mover and air-gap is then computed and then compared with the imposed design data.

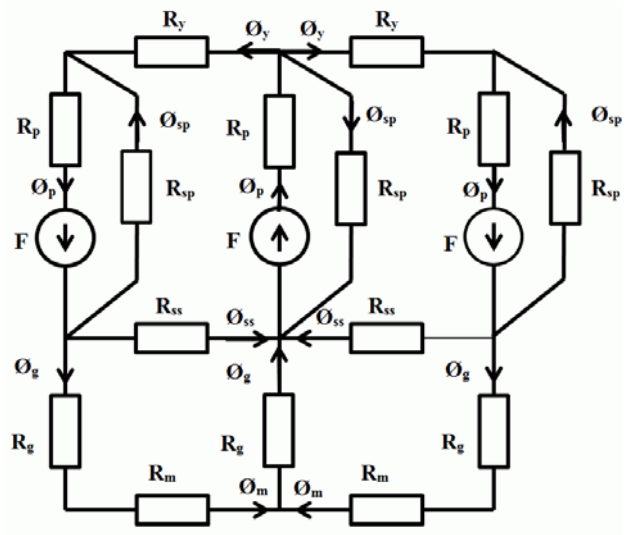

Figure 3. Magnetic equivalent circuit of the tubular machine.

The analytic computation was done for a shifting of half of mover piece from the stator one. As it results from the magnetic circuit, the biggest value of the flux is in the poles. Considering this as the reference value, the percentage value of 83.89% is obtained for the flux in the yoke, 72.7% for the air-gap flux, and 11.2%, respectively 16.1% for the two leakage fluxes. The mean value of the air-gap flux density is of 1.27 T, in very good accordance with the chosen one in the design

V. CONCLUSIONS

This paper deals with a new type of tubular machine, belonging to the transverse flux machines class and operating based on the variable reluctance principle. The design algorithm which is proposed for this structure was verified using an analytical method based on the equivalent magnetic circuit of the machine. The machine is suitable for applications requiring precise positioning step or high forces at low speed, with reduce strokes.

ACKNOWLEDGMENTS

This paper was supported by the project "Development and support of multidisciplinary postdoctoral programmes in major technical areas of national strategy of Research - Development - Innovation" 4D-POSTDOC, contract no. POSDRU/89/1.5/S/52603, project co-funded by the European Social Fund through Sectorial Operational Programme Human Resources Development 2007-2013."

REFERENCES

[1] D.C. Popa, "Theoretic and Experimental Study of the Linear Transverse Flux Reluctance Motor" (in Romanian), Ph.D. thesis, Technical University of Cluj-Napoca (2008).

[2] D.C. Popa, V.I. Gliga, V. Iancu, "*Tubular Transverse Flux Reluctance Motor in Modular Construction",* Annals of the University of Craiova, Serie: Electrical Engineering, Year 34, no. 34, 2010, Vol. II, pp. 79-83 (2010).

[3] D.C. Popa, V. Iancu, L. Szabó, "*Linear Transverse Flux Motor for Conveyors"*, Proceedings of the 6th International Symposium on Linear Drives for Industrial Application (LDIA '2007), Lille (France), paper 188, on CD (2007).

[4] J.F. Llibre, N. Martinez, B. Nogarede, P. Leprince – Linear tubular switched reluctance motor for heart assistance circulatory: Analytical and finite element modeling, 10th International Workshop on Electronics, Control, Measurement and Signals (ECMS), pp. 1-6 (2011).

[5] I. Boldea., "Linear Motion Electromagnetic Devices", Taylor & Francis, U.S.A. (2001).

[6] Larisa Strete, I.A. Viorel, "*Modular Tubular Switched Reluctance Motor"*, Proceedings of PCIM '08, vol. Intelligent Motion, Nürnberg (Germany), on CD (2008).

[7] G. Henneberger, I.-A. Viorel, "Variable Reluctance Electrical Machines", Shaker Verlag, Aachen, 2001.

[8] M. Ruba., "Design and Study of a Modular Switched Reluctance Machine", Ph.D. Thesis, Technical University of Cluj-Napoca (2008).

[9] R. Krishnan, "Switched Reluctance Motor Drives - Modeling, Simulation, Analysis, Design, and Applications", Industrial Electronics Series, CRC Press, 2001.