Fault Tolerant Switched Reluctance Machine's Comparative Analysis

Mircea RUBA, Loránd SZABÓ
Technical University of Cluj
15, Daicoviciu str., RO-400020 Suceava, Romania
Mircea.Ruba@mae.utcluj.ro

***Abstract*— The Switched Reluctance Machine (SRM) is ideal for safety critical applications (aerospace, automotive, defence, medical, etc.) where it is desirable that the electrical drive system to be fault tolerant. The phase independence characteristics of the SRM enable it to operate (at lower power and higher torque ripples) also under partial phase failure conditions. Its reliability can be improved during its conception stage by applying special fault tolerant designs and in its exploit by monitoring its condition and applying fault detection techniques. In the paper a fault tolerant SRM structure is proposed. Its characteristics are analyzed by means of simulations. The proposed machine's performances are compared with that of a SRM having usual construction. All the obtained results emphasize the usefulness of the proposed fault tolerant SRM.**

***Index Terms*— Coupled simulation, fault tolerant, switched reluctance machine.**

I. INTRODUCTION

The concept of fault tolerance emerged in the field of information technology (IT) because of the demand of safety and reliability of a system. Later on more and more fields of engineering took over the concept.

Connected fault tolerant equipments form advanced fault tolerant systems [1], which are interconnecting components having the same goal: to serve an output for a given application. As errors are part of life, the possibility of their appearance in a complex system must be taken into account.

Nevertheless fault tolerant systems are not so easy to design. It has to detect faults in its components and also must have the ability either to correct it (for example by switching to a backup unit when the main one fails) or to circumvent it (for example by reconfiguring the system) [2].

Nowadays in electrical engineering one of the main tendencies is to develop applications as safe as possible. The concept of fault tolerant device became a purpose for a lot of researchers. With the help of electrical power devices that evolved in the last years a combination between electric drives and machines pushed the limits of fault tolerance [3]. Any new results in this area can be of real interest for all the researchers working in the field of fault tolerance.

In the electrical machine design fault tolerant variants required not only structure modifications, but also for special winding connections and intelligent electronic devices. To compensate the higher costs of a more complex power converter relatively simple machine has to be designed.

It is well-known that the switched reluctance machine (SRM) possesses unique characteristics that promote it for fault tolerance capability: the ability to continue its operation despite faulted motor windings or inverter circuitry. The only effects of a fault are the power reduction proportional to the number of faulted phases out of total phases and the increase of torque ripple [4].

Because of the magnetic independence of the SRM's phases and the circuit independence of the inverter phases, a fault in either a motor winding or an inverter phase can be relatively easy detected and isolated without any effects on the other phases. Hence the SRM can continue its operation also with one or more phases disabled. Winding fault detectors can indicate the existence of faults, and the intelligent motor controller can isolate them.

In contrast, winding faults in polyphase ac machines have more serious consequences. A fault in one phase seriously affects the operation of the other phases because of the mutual magnetic coupling of the stator windings. The dropout of a single phase (either by winding disconnection, or by power switch inaction) drops a three-phase machine to single-phase excitation [5].

Although it's inherent fault tolerant capability faults of diverse severity can occur in SRM [6].

The reliability of a SRM based drive system can be improved mainly by two ways:

i) by permanently (preferably on-line) monitoring its condition, and applying advanced fault detection methods
ii) by using fault tolerant designs for both the machine and power converter.

Thanks to the improvements in the field of power electronics and also to digital signal processing nowadays intelligent solutions can be provided in designing a fault tolerant electrical drive system. The separate phase feeding and control of the machines allow an easier approach of the fault tolerant tasks, offering better results [7].

The two SRMs in study were compared by means of simulation. The models were built up using specific software packages. Flux 2D was used for modelling the machine using finite element method (FEM) [8]. The MATLAB-SIMULINK environment was applied for modelling the inverter's control system and to simulate the faults in study. These two programs were coupled together using the Flux-to-SIMULINK Technology. This way it was possible to study in details all the typical faulty conditions of the machines.

II. THE PROPOSED MACHINES

In order to obtain a fault tolerant variant of a usual electrical machine modified topologies are required.

It is an important issue to minimize the losses in the machine. The main idea was to perform this by shortening the flux paths in the new machine structure, because the shorter flux paths means also lower iron losses.

As a starting point of the design a classical 12/8 SRM structure was considered, as that shown in Fig. 1.

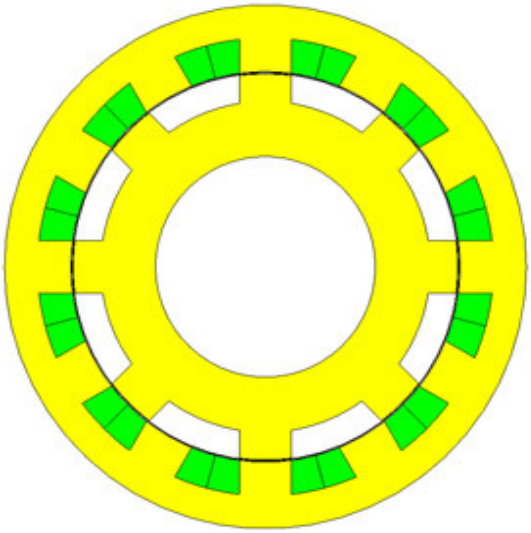

Fig. 1. The initial SRM structure

The machine has 12 concentrated coils wound around each stator pole. Two coils from opposite poles are adequately connected together to form a phase. Hence there are 6 phases. This structure was selected because it can be transformed relatively easily in a fault tolerant variant. The proposed modifications are implying both the rotor structure and the connection of the windings [9].

The modified SRM has 14 rotor poles, as shown in Fig. 2.

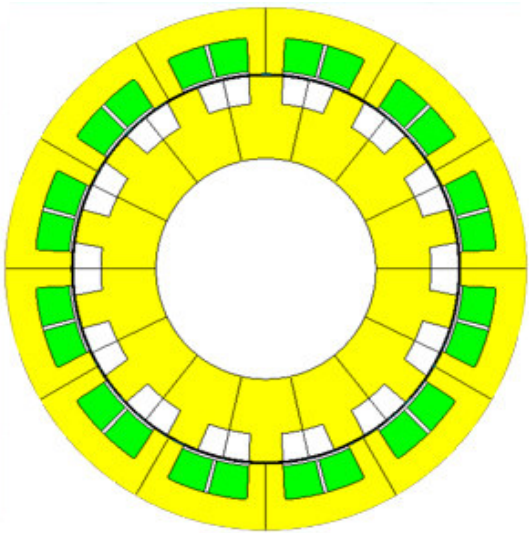

Fig. 2. The fault-tolerant SRM structure

Changing the way of flux path crossing the air-gap and closing it thru two adjacent stator poles (see Fig. 3) was the first idea in achieving an efficient fault tolerant SRM.

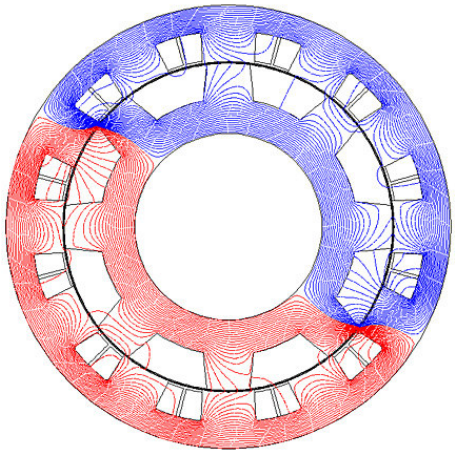

a) The initial SRM

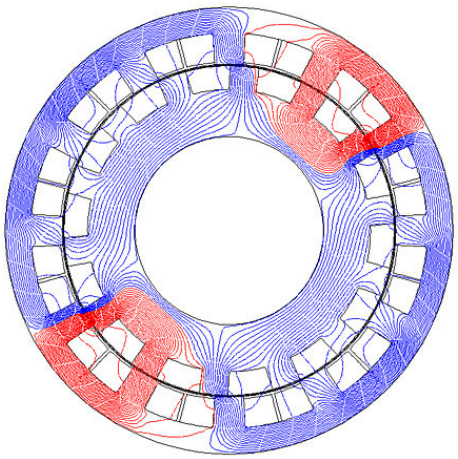

b) The fault-tolerant SRM

Fig. 3. The flux lines in the SRM machines

In such a rotor design at each time two adjacent phases are fed, which means in total 4 coils. At each moment two pairs of adjacent stator poles are used for the torque development. Both machines in study have the same stator, but they have different rotors and different phase connections.

The increase of the rotor poles will enhance the fault tolerance in means of torque development and safe operation.

To emphasize the difference between the two sample motors in study their geometrical dimensions are given in the Table I.

TABLE I
THE GEOMETRICAL DIMENSIONS FOR THE TWO MACHINES

	Usual 12/8 topology	Proposed 12/14 topology
Stator outer diameter [mm]	190	190
Stator inner diameter [mm]	141	141
Stator pole depth [mm]	12	12
Rotor outer diameter [mm]	140	140
Rotor inner diameter [mm]	120	120
Active stack length [mm]	315	100
Air-gap [mm]	0.8	0.8

III. THE CONVERTERS

The control system has to have the intelligence to detect the fault, to isolate it, mask it and remedy it, all in a manner as its behaviour to be invisible as less as possible [10], [11], [12]. In a fault tolerant converter design the complete separation between phases is an obligatory requirement [13].

The proposed converter has a separate half H-bridge connection for every coil in order to be able to control each one independently, as requested by the fault tolerant design (see Fig. 4) [14].

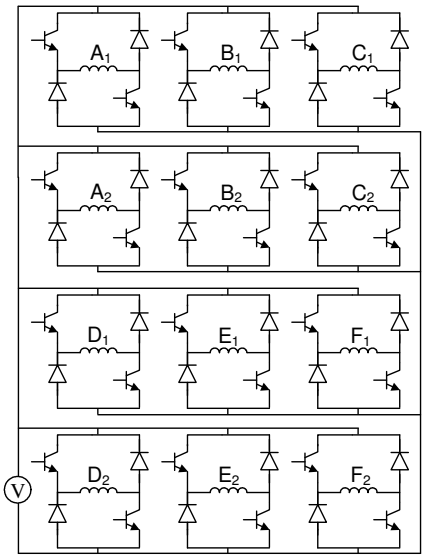

Fig. 4. The complex power converter

The parallel connection to the bars is a second achievement that sets the fault tolerance to a higher level. The simulation of the power converter is performed by using an electrical circuit build up in Electriflux, Flux 2D's circuit editor, and by attaching into the FEM model of the machine.

As it can be seen each channel of one phase is modelled using two electrical coils, corresponding to the "come and go" sides of the winding.

In the electric circuit model the power switches were replaced by resistors.

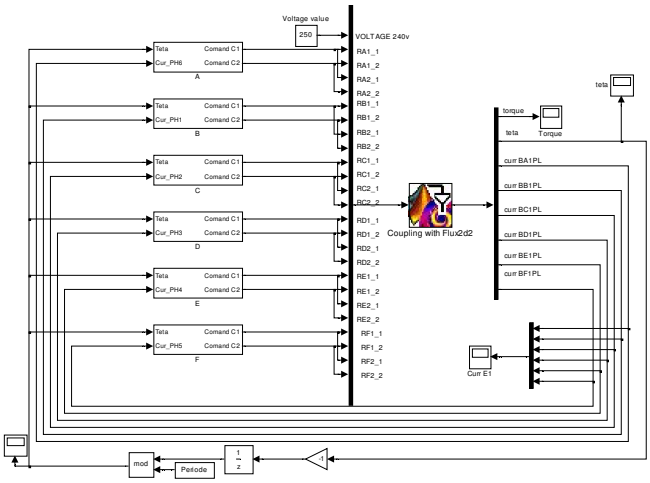

Fig. 5. The main window of the SIMULINK program

In fig. 5 the SIMULINK model of the entire SRM based fault tolerant drive system is given highlighting also the coupling with Flux 2D [15], [16].

As it can be seen there are 6 blocks generating the phase currents upon the PWM technique.

When each step is computed, the results are sent to the Flux 2D model, and a response (concerning the position, torque and phase currents) is obtained after the field computations, and it is sent back to the SIMULINK model. The next step is computed based on these feedback values, so the system operates in closed loop. The firing angles of the power switches are defined versus the rotor position, and the values are set from an outside m-type file, together with the maximum current value and the changing switch resistance values.

As it was mentioned previously for the proposed new 12/14 topology the winding is a 6-phase one, and for each phase there are two coupled channels. To be able to compare the two machines the 12/8 poles SRM variant was designed with a 3-phase winding, each phase having 2 connected channels. Hence for each phase, four stator poles correspond.

In order to perform the coupled simulations some parameter adjustments are required. Two programs are coupled together, both needing high computer resources. Therefore a compromise had to be taken by lowering the mesh density in order to obtain affordable computation time, but in meantime, not to decrease the precision of the results.

The electrical circuits and the SIMULINK schemes are given only for the 12/14 topology. For the classical 12/8 one these are closely similar.

For all the simulations the velocity was imposed for both machine the same, 600 r/min. The steady-state regime was studied in the case of both machines. The main interest was to study the fault tolerance capacity of the two machine variants under different fault conditions.

IV. THE SIMULATION RESULTS

Different cases were studied in order to compare the two machines and to check their fault tolerance capability:

i.) normal operating mode (reference case),
ii.) open circuit of one channel,
iii.) open circuit of one phase,
iv.) open circuit of two channels from different phases,
v.) open circuit of one phase and one channel from a different phase (worst case in study).

Different computation times were set for the two machines, in a way to be able to observe the effects of the faults. The 6-phase (12/14) machine was simulated 0.008 s and the other one 0.024 s. In Fig. 6 the current and torque waveforms versus time for the healthy and for all the four faulty cases for both SRM structures are presented.

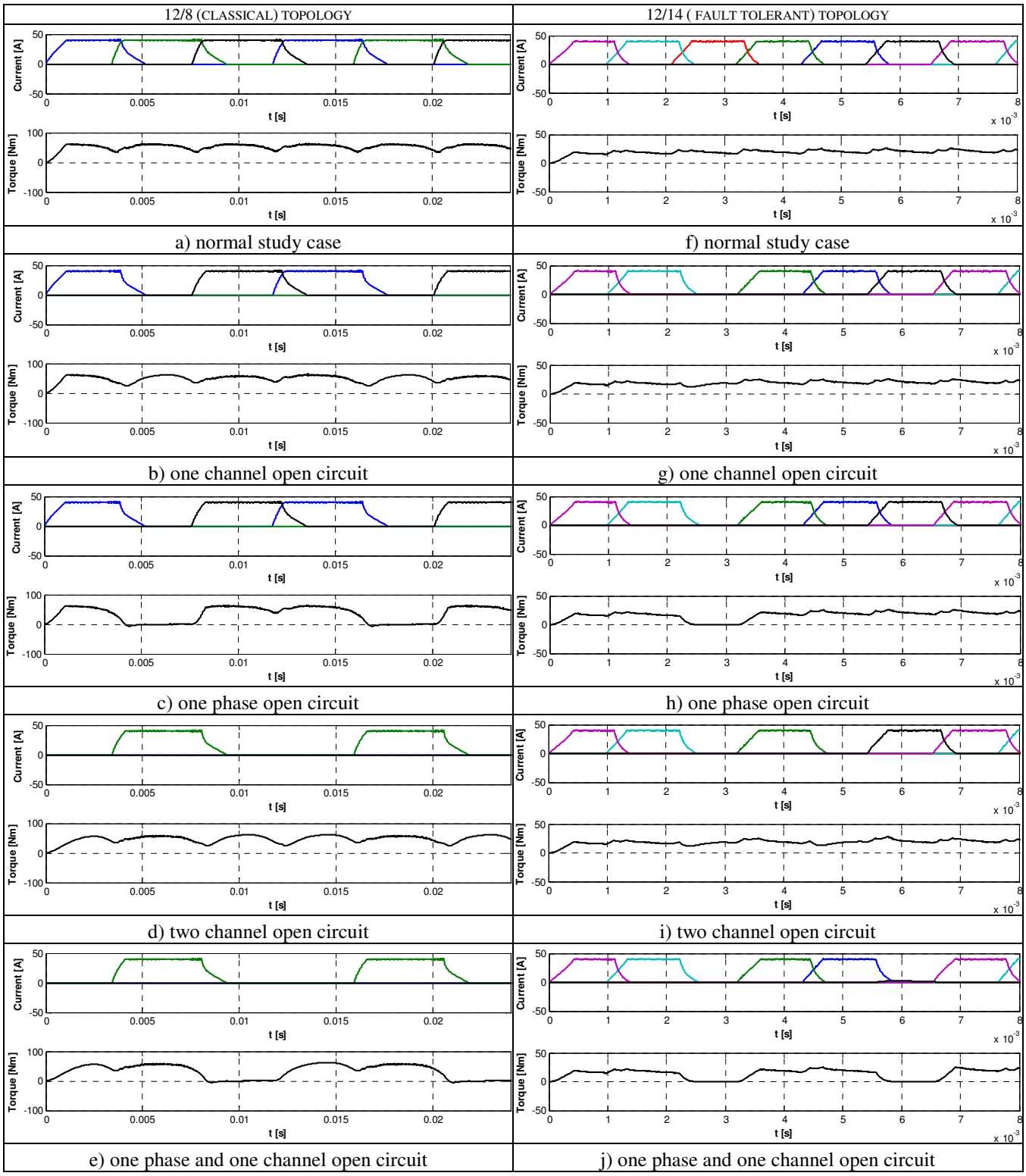

Fig. 6. Current and torque plots of the two machines in study under different faulty conditions

For both machine structures the imposed faults were the same. Also the feeding voltage, the current value and the electric parameters of the windings were set identical, therefore a correct comparison of the two machines can be performed.

In the plots in Fig. 6 the effects of faults can be observed as missing currents and decreasing torques, corresponding to the faulty windings.

Cases a) and f) are for the normal operating modes. The obtained values are considered as references for the other ones.

As it was expected the machine variant with higher number of phases and stator poles have lower torque ripples. In the figures the amplitude of the ripples can be clearly observed.

Results for the one channel open circuits are shown in Fig. 6b and Fig. 6g. Due to the missing channel currents the torque is lower and its ripple is higher.

When an entire phase is faulty (Fig. 6c and Fig. 6h) the torque is falling to zero, because inertia and the resistive torque are nil, since no-load condition was studied.

In the case of the 12/14 topology (having a 6 phase winding), the fault on a single phase influences less the torque development capacity then for the 12/8 structure with a three-phase winding.

In the situation of the faults on two different channels from two different phases (Fig. 6d and 6i) the torque ripple is greater for both machines, but the ripple of the 12/8 topology is more high than in the case of the 12/14 one.

The worst case in study is the fault of an entire phase, and a second fault on one channel from different phase. The torque of both machines taken into study reaches zero, therefore the ripples are the highest in this case.

As it can be seen in the Table II the fault tolerant 12/14 SRM topology is able to develop torque (around 70% of the rated torque) and continue its movement even at the hardest fault in study, when one phase and one channel from a different phase is damaged.

TABLE II
THE MEAN TORQUES OF THE TWO MACHINES FOR ALL THE CASES TAKEN IN STUDY

	Studied cases	Mean torques [N·m] and percentage of the rated torque
12/8 SRM topology	Healthy case	52.21 (100%)
	Faulty case 1	49.10 (94.04%)
	Faulty case 2	35.27 (67.55%)
	Faulty case 3	46.31 (88.69%)
	Faulty case 4	33.36 (63.89%)
12/14 SRM topology	Healthy case	19.93 (100%)
	Faulty case 1	19.59 (98.29%)
	Faulty case 2	16.16 (81.03%)
	Faulty case 3	19.28 (96.71%)
	Faulty case 4	13.79 (69.19%)

Obviously the torque ripples are the greatest in this case where the currents are nil. Of course heating and force distribution issues limit the operation in this case of fault. For the 12/8 structure for the same fault the torque ripples are substantially greater during the entire simulation time, due to the low number of phases remained healthy.

Comparing the results from Table II it can be observed that the proposed machine with 12/14 topology has higher torque capability at all the faults in study.

In the case of the first fault in study, nearly full torque is developed (more then 98% of the rated value), versus the lower torque from the 12/8 (about 94%).

A main disadvantage of the 12/14 fault tolerant switched reluctance machine is its power converter. In order to be also fault tolerant it has to be complex, and able to detect and isolate the defects. The inverter (shown in Fig. 4) has 24 power switches and 24 reverse current diodes. Separation of command for each phase or channel will increase the costs. Upon the demands of specific applications, the electrical drive system (both the power converter and the machine) can be optimised and a compromise between fault tolerance level and manufacturing costs can be made.

A solution to improve the torque development of a machine in case of faulted windings is to isolate of the defect, and to increase the current in the remaining healthy phases. By this the torque's average value can be held at the same value as in normal operation mode, but the ripples will be greater. This solution can be used only if the windings and the cooling system of the machine were designed to support the greater currents.

Higher currents mean higher temperature and higher losses. Uncontrolled temperature rise can damage the healthy phases, on one side, and on the other, operation at higher currents demand higher power converters.

In our study the current was set identical for both machines, and no current increase in case of faults was considered. The reason was to better compare the two SRM variants as their fault tolerance is concerned.

A lower fault tolerance level can be achieved also with the 12/8 structure by specific winding connections. Each phase is compound of two channels with separate command and feeding. Usually in the case of classic structures a four poled phase, is connected to the same bar and one command sets the firing moment for the entire phase [17].

V. CONCLUSIONS

The comparison of the two SRMs by means of simulations seemed to be the best solution for studying the fault tolerant system. The increasing of the rotor pole number is accepted for achieving the fault tolerant system.

To obtain a high level of fault tolerance a complex control system is required and high number machine's pole [18]. The study demonstrated that separating the phases/channels, setting new connections between the existing windings, and using a complex control system will provide the best solution for the fault tolerant SRM based electrical drive system.

In the paper for the 12/14 topology the most complex possibility of separation was presented. In accordance with the application, the level of complexity and of course the tolerance level can be decreased.

The increased number of rotor poles and the complex electronic system that drives and controls the machine means of course higher costs. These costs depend on the level of tolerance implemented in the system.

The coupled simulation program connecting two software environment (FLUX 2D and SIMULINK) was useful in studying the effects of different winding faults on the torque developing capacity of the SRM. The computing power of FLUX 2D thus joined the facilities of SIMULINK in simply describing the different working regimes of the machines and drives taken into study [19].

The main problems were regarding the computation times. In order to obtain precise results and reasonable computation time the quality of the FEM model's mesh had to be lowered.

Finally it can be stated that the coupled programs allow a high-quality simulation of closed-loop complex systems.

ACKNOWLEDGMENT

A part of the work was possible due to the support given by the Romanian National Centre for Program Management (CNMP) under grant "*Parteneriate no. 12121 / 2008*" entitled "*Fault-Tolerant Equipment Controlled by Bio-Inspired Electronic Architectures*" (URL: http://elbioarch.utcluj.ro).

The authors should like to sincerely thank this way for the financial support.

REFERENCES

[1] Blanke, M., "*Diagnosis and Fault-Tolerant Control*," Springer Verlag, 2006.

[2] Husain, I., Radun, A., Nairus, J., "Fault Analysis and Excitation Requirements for Switched Reluctance Generators," *IEEE Trans. on Energy Conversion*, vol. 17, no. 1 pp. 67-72, March 2002.

[3] Ertugrul, N., "*LabVIEW for Electric Circuits, Machines, Drives, and Laboratories*," Prentice Hall PTR, 2002.

[4] Basu, K., Prasad, J., Narayanan, G., "Minimization of Torque Ripple in PWM AC Drives," *IEEE Trans. on Industrial Electronics*, vol. 56, no. 2, pp. 553-558, February 2009.

[5] Stephens, C., M., "Fault detection and management system for fault-tolerant switched reluctance motor drives," *IEEE Trans. on Industry Applications*, vol. 27, no. 6 (Nov/Dec 1991), pp. 1098-1102.

[6] Miller, T.J.E., "Faults and unbalance forces in the switched reluctance machine,' *IEEE Trans. on Industry Applications*, vol. 31, no. 2 pp. 319-328, Mar/Apr 1995.

[7] Heimerdinger, W., Weinstock, C., "*A Conceptual Framework for System Fault Tolerance*," Technical Report CMU/SEI-92-TR-033, Carnegie Mellon University, Software Engineering Institute, Pittsburgh (USA), 1992.

[8] Kuczmann, M., Iványi, A., "*The Finite Element Method in Magnetics*," Akadémiai Kiadó, Budapest, 2008.

[9] Ruba, M., Anders, M., "Fault Tolerant Switched Reluctance Machine Study," in *Proc. of the Int. Conf. on Power Electronics, Intelligent Motion and Power Quality (PCIM '2008),* Nürnberg (Germany), 2008

[10] Mir, S., Islam, M.S., Sebastian, T., Husain, I., "Fault-tolerant switched reluctance motor drive using adaptive fuzzy logic controller," *Proc. of the IEEE Int. Electric Machines and Drives Conf. (IEMD '03*), Madison (WI, USA); vol. 2, pp. 835-841.

[11] Park, B.,G., Kim, T.,S., Ryu, J.,S., Hyun, D.,S., "Fault Tolerant Strategies for BLDC Motor Drives under Switch Faults," in *Record of the 2006 IEEE Industry Applications Conf.*, Tampa (FL, USA), vol. 4, pp. 1637-1641.

[12] Senjyu, T., Kinjo, K., Urasaki, K., Uezato, K., "High efficiency control of synchronous reluctance motors using extended Kalman filter," *IEEE Trans. on Industrial Electronics,* vol. 50, no. 4, pp. 726-732, August 2003.

[13] Kasson, M., Eaves, S., "*Fault tolerant motor drive arrangement with independent phase connections and monitor system*," Patent no. WO01/91265, 29 November 2001.

[14] Bose, B.,K., "Power Electronics and Motor Drives Recent Progress and Perspective," *IEEE Trans. on Industrial Electronics*, vol. 56, no. 2, pp. 581-588, February 2009.

[15] Ruba, M., Szabó, L., Strete, L., Viorel, I.,A., "Study on Fault Tolerant Switched Reluctance Machines", in *Proc. of the 18th Int. Conf. on Electrical Machines (ICEM '2008)*, Vilamoura (Portugal), on CD: Fullpaper_comm_id01200.pdf.

[16] Husain, I., Hossain, S.,A., "Modeling, Simulation, and control of switched reluctance motor drives," *IEEE Trans. on Industrial Electronics,* vol. 52, no. 6, pp. 1625-1634, Dec 2005.

[17] Ruba, M., Oprea, C., Szabó, L., "Comparative Study on Switched Reluctance Machine Based Fault Tolerant Electrical Drive Systems," *Proceedings of the IEEE International Conference on Electrical Machines and Drives (IEMDC '2009),* Miami (USA), on CD: 11129.pdf.

[18] Park, J.,D., Kalev, C., Hofmann, H.,F., "Control of High-Speed Solid-Rotor Synchronous Reluctance Motor/Generator for Flywheel-Based Uninterruptible Power Supplies," *IEEE Trans. on Industrial Electronics,* vol. 55, no. 8, pp. 3038-3046, August 2008.

[19] Ruba, M., Szabó, L., "Fault Tolerance Study of Switched Reluctance Machines by Means of Advanced Simulation Techniques," *Pollack Periodica*, (Academic Publisher, Budapest, Hungary), vol. 4, no. 2 (August 2009), pp. 107-116.